FREQUENCY SYNTHESIZER
(90 to 120MHz)
5104
TRAINING MANUAL

adret

ae

electronique®

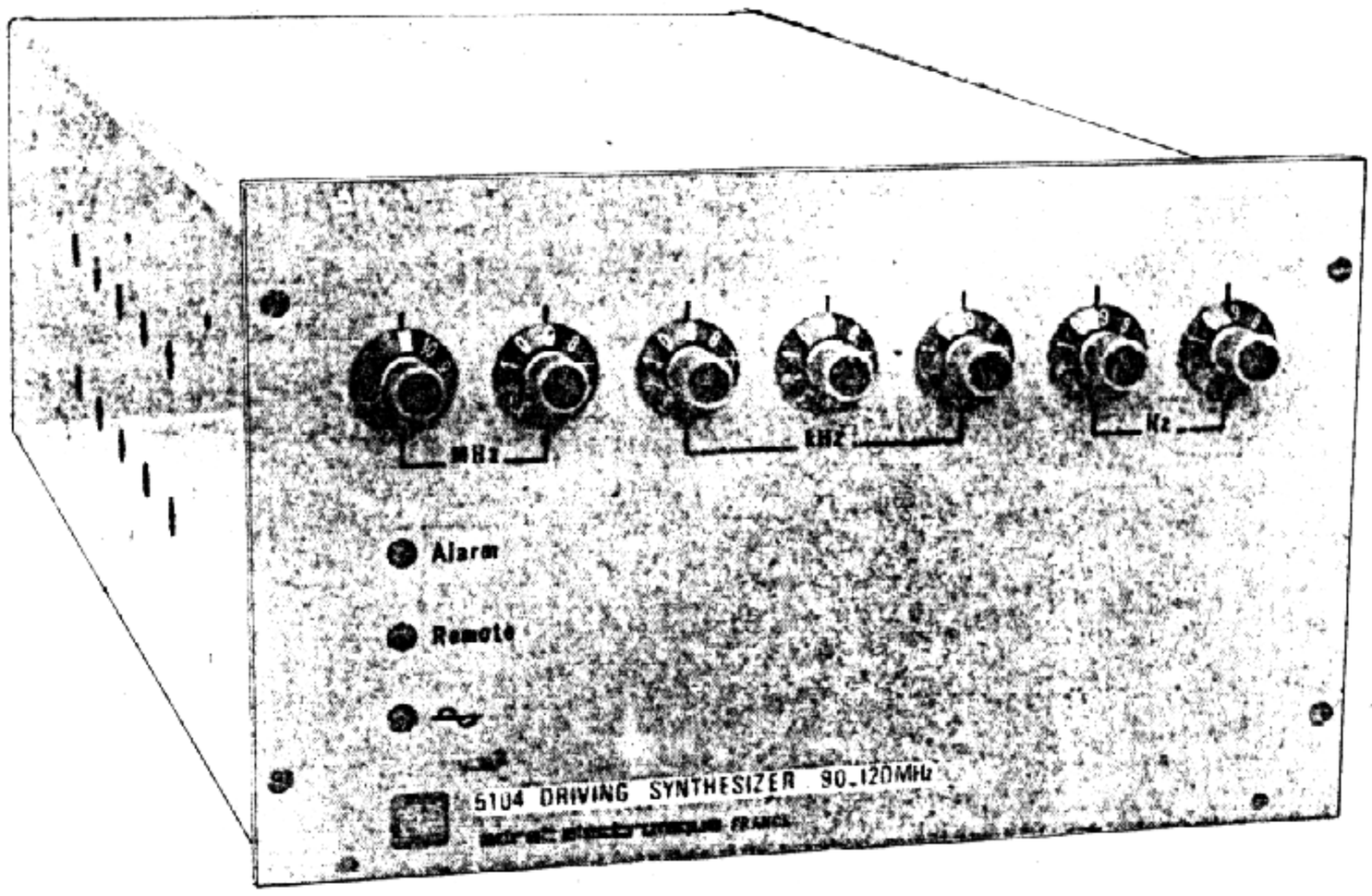

FREQUENCY SYNTHESIZER
(90 to 120MHz)

5104

TRAINING MANUAL

SUMMARY

GENERAL 2

CHAPTER I - SPECIFICATION 3

CHAPTER II - OPERATING INSTRUCTIONS . 4

- Setting up
- Connections
- Controls location
- Preparation for use
- Use

CHAPTER III - PRINCIPLE OF OPERATION

- Principle 8
- Generation of the variable frequency 8
- Principle of the phase/frequency comparator 9

CHAPTER IV - MAINTENANCE 10

Bloc diagram 11

1. **Power supply** 12
   Circuit diagram 13
   Transformer 14
   Rectifier/filter card layout 15
   Regulator card layout 16
   Power transistor mounting 17
2. **Subsystem location** 18
   General fault tree 19
   Modules location 20
   Overall diagram 21
3. **First generation card** 22
   Circuit diagram 24
   Wiring and component layout diagram 25
4. **Second generation card** 26
   Circuit diagram 29
   Wiring and component layout diagram 30
5. **Increment mixer module** 31
   Circuit diagram 33
   Wiring and component layout diagram 34
6. **1 MHz spectrum module** 35
   Circuit diagram 37
   Wiring and component layout diagram 38
7. **1 MHz divider/lock-on module** 39
   Circuit diagram 41
   Wiring and component layout diagram 42
8. **Phase/frequency comparator module** 43
   Circuit diagram 46
   Wiring and component layout diagram 47
   Circuit diagram of the output module 48
   Wiring and component layout diagram . 49-50-51
9. **Locking of master oscillator** 52

CHAPTER V - FINAL CHECK

List of required measuring instruments . . . 53

CHAPTER VI - ELECTRICAL DIAGRAMS

- Display-code filter 59
  Wiring and component layout diagram 60-61
- 623 Master oscillator 62

NOMENCLATURE 63

LIST OF THE PLATES

Rear-panel inter connexions 5
Front-panel references 6
Rear-panel references 7
Block diagram 11
List of required measuring instruments 53

Edition 07-80

GENERAL

The ADRET 5104 synthesizer is a synthesis-technique programmable master oscillator covering the band from 90 to 120 MHz with 10 Hz resolution and a stability of 2 parts in 10^8 per day.

The output frequency, intended for the control of hyperfrequency sources such as those used in satellite communications facilities, is available on a coaxial connector on the rear of the instrument at a fixed level of + 13 dBm/50 Ω.

The output frequency may be set either manually on seven decimal switches or remotely, by an externally-generated program fed to a rear-panel connector.

MAINTENANCE

The construction of ADRET-ELECTRONIQUE instruments is basically modular. This is inherent in their design. Maintenance of them is therefore easily carried out in two distinct stages :

— This first stage consists of replacing the defective module or sub-assembly with an identical module from the spare-parts stock. Almost all of the modules take the form of plug-in-boards with keyed connectors. They are adjusted at the plant on special test benches in accordance with a precise procedure that does not vary from instrument to instrument, guaranteeing a high degree of interchangeability. Identifying the defective sub-assembly is considerably facilited by the schematics, charts, and explanations given in the technical manuals ;

— The second stage of maintenance consists of trouble-shooting the defective sub-assembly. During the guarantee period (one year from the date of delivery), this will be done free of charge by ADRET-ELECTRONIQUE in no more than a week or two. ADRET is of course ready to help its customers following this garantee period, charging a modest sum for each maintenance operation.

Companies or organizations with qualified staff and the necessary basic instrumentation (oscilloscopes in particular) can readily trouble-shoot these instruments themselves. The technical manual supplied with the instrument includes detailed circuit diagram , a parts list, and chapters on adjustement and maintenance.

ADRET is also prepared to organize training sessions covering one or several instruments for its customers ; a good technician will generally need two or three days to become familiar with our products.

Finally, we can supply, on request, such spare parts as transistors, IC's, resistors, capacitors, etc..., if these have to be replaced.

CHAPTER I – SPECIFICATION

FREQUENCY
Frequency range : 90 to 119,999 99 MHz
Resolution : 10 Hz
Number of digits : 7
Stability :
- 2 parts in 10^{-8} per day after 72 hours'operation
- 5 parts in 10^{-9} per day after 3 months'operation

LOCKING
To external standard, by built-in comparator, monitored by a ± 5 V output on the rear panel, with built-in master oscillator tuned by a ten-turn potentiometer.
Frequency : 5 MHz
Level : 200 mVrms to 1 Vrms/50 Ω

OUTPUT LEVEL
The output signal is available on a rear-panel BNC connector.
Fixed output level : + 13 dBm/50 Ω
Output level flatness from 90 MHz to 120 MHz : ± 1 dB

SPECTRAL PURITY
Harmonic signals : – 26 dB
- Non harmonic signals :
- Line frequency spurious : – 70 dB (typical)
- Other spurious : – 80 dB (– 85 dB typical)

Phase noise (in a 1 Hz bandwidth typical)
- 115 dB at 300 Hz from carrier
- 120 dB at 1 kHz from carrier
- 125 dB at 10 kHz from carrier
- 140 dB at 100 kHz from carrier

PROGRAMMING
Manual/Remote switching by logic input to programming connector.
Impedance : 2.2 kΩ
Current source TTL logic :
- «0» logic level : 0 V to 0.7 V/0.2 mA
- «1» logic level : + 2 V to + 5 V/0.1 mA

1-2-4-8 BCD code
- Parallel input
- Acquisition time : See table below

Digit affected by the frequency switching	Settling time at 100 Hz from final frequency	Settling time at 10 Hz from final frequency
10^7 - 10^8 Hz	1,8 ms	18 ms
10^6 Hz	9 ms	12 ms
10^5 Hz	4 ms	6 ms
10^4 Hz	18 ms	25 ms
10^1 - 10^2 - 10^3 Hz	20 ms	35 ms

The above-mentioned settling times depend only on the weight of the digit affected by the frequency switching.

ALARM
A front-panel indicator monitors the frequency of the output signal.
On : output frequency different from programmed value.
Off : output frequency equal to programmed value.

POWER SUPPLY
Voltage : 115 or 230 Vrms ± 10 %
Frequency : 50 to 400 Hz
Consumption : 22 VA

TEMPERATURE RANGE
Operation : 0 to + 50 °C
Storage : – 20 to + 70 °C

MECHANICAL DATA
Height :
- Front-panel : 126 mm
- Cabinet : 110 mm

Width : 203 mm
Depth : 400 mm
Adaptable to 19" rack : 3 U (two synthesizers can be inserted in the mainframe).
Mass : 6,5 kg.

CHAPTER II
OPERATING INSTRUCTIONS

II.1 - SETTING UP

The instrument is plugged into the mains using an FRB DO3 power cord with automatic lock (supplied with the instrument).
Set the mains voltage selector to 115 or 230 V (each setting has a tolerance of ± 10 %). Protection is by two 250-mA fuses, connected in series for 230 V and in parallel for 115 V.

II.2 - CONNECTIONS

See Plate III.1 : Connector Characteristics.

FRONT PANEL
There are no connectors on the front panel of the 5104.

REAR PANEL
Plate III.1 shows all connections to be made to the rear panel of the instrument.

II.3 - CONTROLS LOCATION

3.1 - FRONT PANEL

The seven decimal switches on which the output frequency is set are on the front panel. They provide frequency switching from 10-Hz to 10-MHz steps. Three validation lights are also located on the front panel ; in order :
DSO1 : «ALARM», indicating when off that the output frequency is identical to that set on switches **KO1** or programmed via programming connector **SO1.**
DSO2 : «REMOTE», indicating when lit that the «Remote» mode is enabled (from pin 20 of programming connector **SO3** on the rear panel).
DSO3 : « », indicating that the instrument and master oscillator are on ; goes out when the master oscillator has warmed up.

See Plate II.2 for front panel reference.

3.2 - REAR PANEL

All outside connectors, together with the potentiometer used to tune the master oscillator, are located on the rear panel. They are described in Plate V-2.

II-4 - PREPARATION FOR USE

Before turning the instrument on, check that switch **KO2** is set to a position compatible with the mains voltage (115 or 230 Vrms).
As soon as the instrument is plugged in, indicator light **DSO3** on the front panel lights, indicating that the instrument and master oscillator are on. Wait until **DSO3** goes out again before using the instrument.

II-5 - USE

Refer to descriptive Plates II.2 and II.3 for the locations of front and rear panel controls.

5.1 - DIGITAL MANUAL MODE

The Manual mode is selected via pin 20 of rear-panel connector **SO3.**
The absence of a signal on pin 20 selects the Manual mode.
«REMOTE» lamp **DSO2** on the front panel should be off.
Set the output frequency on the seven decimal switches (**KO1**), which are direct-reading.

5.2 - DIGITAL REMOTE MODE

The Remote mode is also selected via pin 20 of programming connector **SO1.**
Apply a «0» level to this pin (0 to 0.7 V/0.2 mA).
«REMOTE» lamp **DSO2** on the front panel should be lit.

Programming should be in TTL-compabible positive logic, since the input circuits consists of a series L TTL gage preceded by an BC filter *(see Plate VI-9 for a circuit diagram of the code filter).*

The desired output frequency is programmed by applying a «1» level to the corresponding code inputs and a «0» level to the remaining pins.

Figure 2 shows the pin references of programming connector **SO3.**
Pin 20 is used to program the operating mode : for the Manual mode, no signal is applied to this pin ; for the Remote mode, a «0» level is applied to it.
Pin 18 provides a logice level determined by the operating mode : «0» in the Manual mode and «1» in the Remote mode.
Pin 19 is connected to the instrument ground, and the remaining pins receive the frequency-programming codes in positive logic («1»= + 2 V to + 5 V/100 µA ; «0»= 0 to + 0.7 V/0.2 mA).
It should be noted that the 8.10^7 Hz bit cannot be programmed from connector **SO3.** Any validation of a step smaller than 1.10^8 Hz validates the 8.10^7 Hz step internally.

Exemples :
1) F = 90 MHz
   To obtain this output frequency, code the 1.10^7 Hz and 8.10^7 Hz steps or simply the 1.10^7 Hz step.
2) F = 96 MHz
   Code the 1.10^7 Hz, 4.10^6 Hz and 2.10^6 Hz steps or all three plus the 8.10^7 Hz step.
3) F = 114 MHz
   Code the 1.10^8 Hz, 1.10^7 Hz and 4.10^6 Hz steps.

FIGURE 2 : Pin references of programming connector SO3.

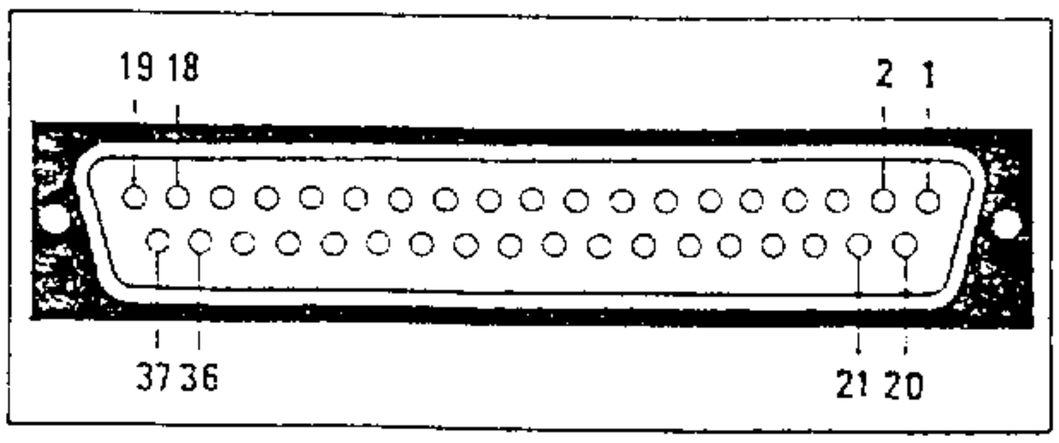

REMOTE PROGRAMMING

PIN	FUNCTION	PIN	FUNCTION
1	$1\ 10^1$	20	LOCAL/REMOTE
2	$8\ 10^1$	21	NC
3	$2\ 10^1$	22	$1\ 10^5$
4	$4\ 10^1$	23	$8\ 10^5$
5	$1\ 10^2$	24	$2\ 10^5$
6	$8\ 10^2$	25	$4\ 10^5$
7	$2\ 10^2$	26	$1\ 10^6$
8	$4\ 10^2$	27	$8\ 10^6$
9	$1\ 10^3$	28	$2\ 10^6$
10	$8\ 10^3$	29	$4\ 10^6$
11	$2\ 10^3$	30	$1\ 10^7$
12	$4\ 10^3$	31	$8\ 10^7$
13	$1\ 10^4$	32	NC
14	$8\ 10^4$	33	NC
15	$2\ 10^4$	34	$1\ 10^8$
16	$4\ 10^4$	35	NC
17	— NC	36	NC
18	Lev.«0»/Lev.«1»	37	NC
19	⏚		

NC : Not connected.
Logic level : «0» : 0 à + 0.7 V/0.2 mA
«1» : + 2 à + 5 V/+ 100 µA

5.3 - LOCKING MASTER OSCILLATOR TO EXTERNAL REFERENCE

The frequency of the crystal master oscillator of the synthesizer may be locked to an external reference fed to rear-panel coaxial connector **J2.** This reference should have the following characteristics :
Frequency : 5 MHz ± 3 parts in 10^7 ;
Level : 200 mV to 1 Vrms/50 Ω.
It should be of good spectral purity.

Procedure : (see Plate 3).

Apply the external frequency to **JO2.** The master oscillator is tuned using ten-turn potentiometer **P1** and locking is displayed on a galvanometer (+ 500 µA) connected across terminals **JO3** and **JO4**, which provide a DC voltage ranging from + 5 V to − 5 V (Zi= 10 kΩ) as a function of the phase difference.
Maximum locking security is obtained when the DC voltage output is 0 and the frequencies are in phase quadrature.
When the master oscillator is not locked, the voltage delivered by **JO3** is not uniform but triangular, and the galvanometer needle oscillates. At a distance from pull-in, the beat is very fast ; as locking is effected, it decelerates steadily until the galvanometer needle stabilizes.

PLATE II.1 - REAR-PANEL INTERCONNECTIONS

CONNECTOR REFERENCE	MARKING	MATCHING REFERENCE	REMARKS
J01	Ouput	RADIALL male BNC	Output of synthesized frequency ; level, + 13 dBm ; impedance, 50 Ω
J02	Input, 5 MHz	RADIALL male BNC	Input of external reference frequency ; 5 MHz, 200 mV to 1 Vrms/50 Ω
J03	Output, ± 5 V	RENAUD female DN4D	Output, ± 5 V ; oscillator locking monitoring voltage
J04	Ground	MFOM female D3203	Ground
S01	Power supply, 50 mA max.	PERENA P15F - 6855	Power supplies for peripherals ; + 12, − 12, and + 6 V with respect to ground (+12, −12, +6)
S02	Mains	FRB - D03	AC power supply ; 115 or 230 Vrms, 50 Hz to 400 Hz
S03	Frequency Programming	SOURIAU DCM, 37 pins	For BCD 1-2-4-8 frequency-programming inputs

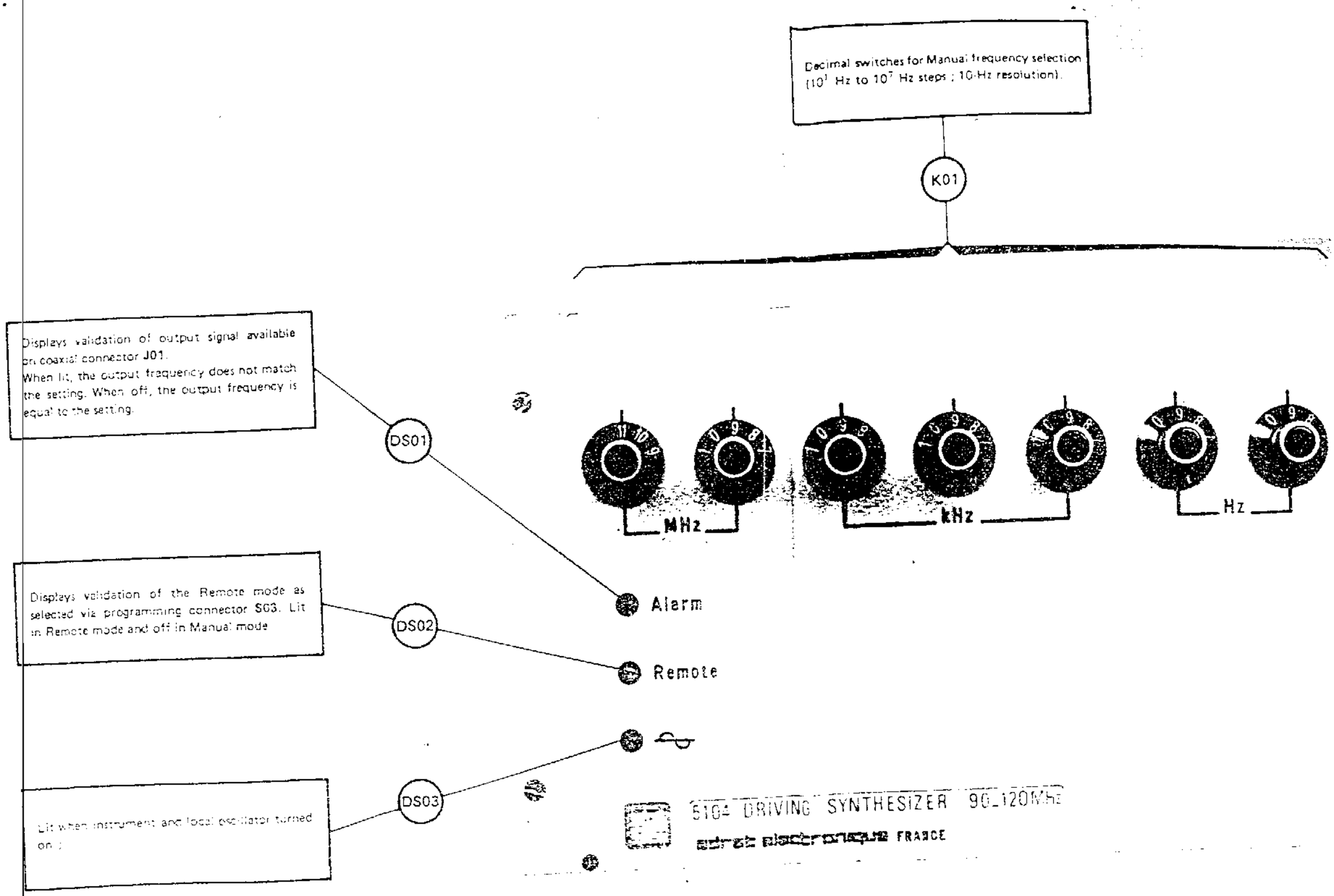

FRONT-PANEL REFER

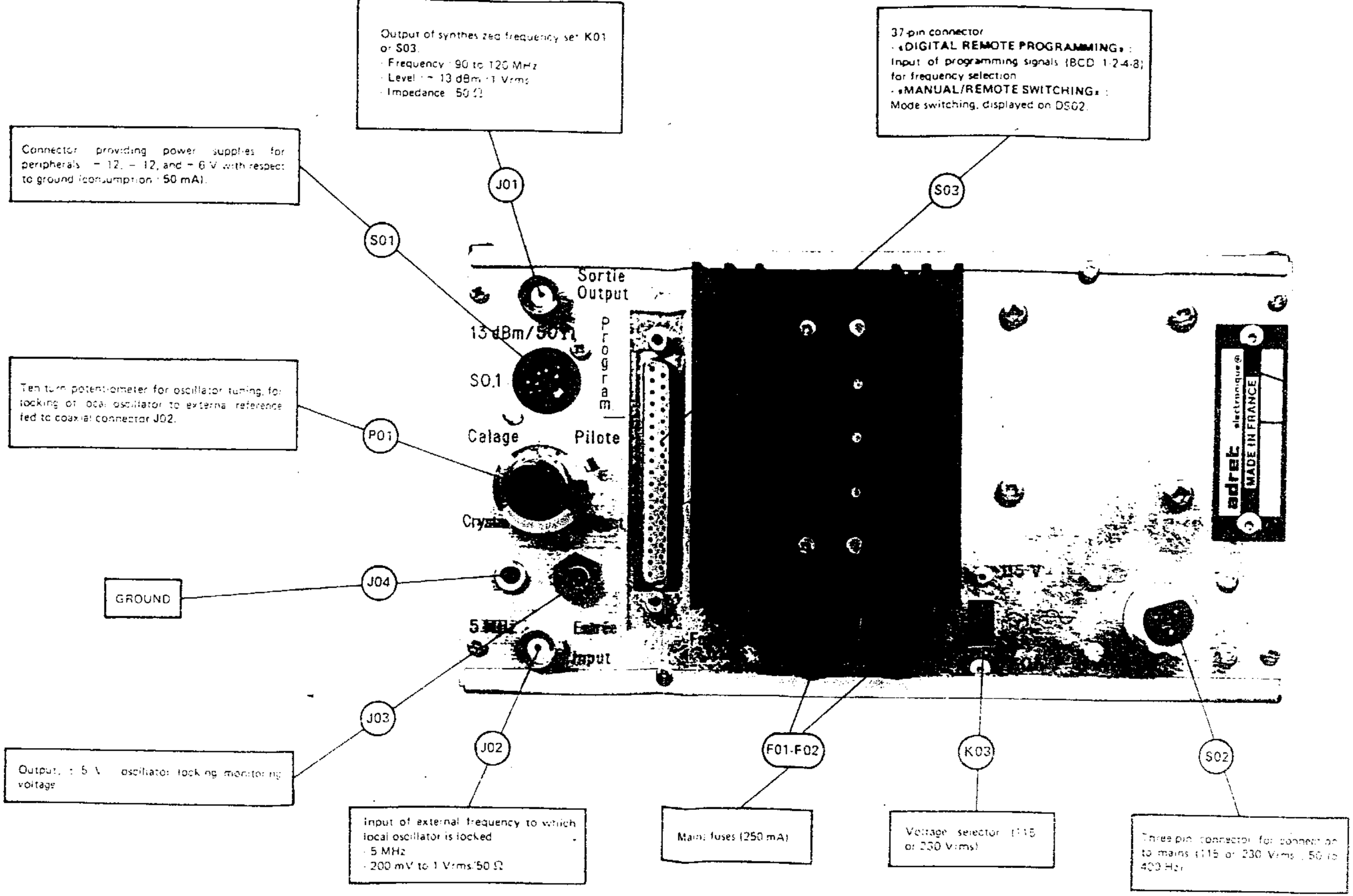

REAR-PANEL REFERENCES

CHAPTER III
PRINCIPLE OF OPERATION

III.1 - PRINCIPLE

The 5104 generates all discrete frequencies from 90 to 119.999,9 MHz in 10-Hz steps. Each output frequency is synthesized from the 10-MHz reference provided by a quartz-crystal master oscillator.
The instrument is in two parts :
1) Generation of 10^1 to 10^5 increments.
2) Generation of 1- and 10-MHz increments and output signal.
The general principle of the 5104 is shown in Plate III.1.

1) Generation of 10^1 to 10^5 increments
The 10^1, 10^2, 10^3 and 10^4 (1 bit) increments are generated by a decimal insertion unit known as the «First Generation», which feeds frequency F1, ranging from 11.6 to 11.999,8 MHz in 200-Hz steps, to the «Increment Mixer» module.
The «Second Generation» generates the 10^4 (2,4 and 8 bits) and 10^5 increments ; this board's output frequence, F2, ranging from 4.84 to 6.8 MHz in 40-kHz steps, is also fed to the «Increment Mixer» module.
The «Increment Mixer» module effects the summation of the increments from the «First Generation» and «Second Generation» boards via a phase-lock loop ; its output frequency, F3, includes all increments from 10^1 to 10^5 and ranges from 6 to 7.9998 MHz in 20-Hz steps. It is fed to the input of the phase/frequency comparator in the phase-lock loop of the output oscillator (CFF module).

2) Generation of 1- and 10-MHz increments and output signal
The second part generates 1-MHz increments and at the same time improves the noise level of the output signal via the insertion of the «1-MHz Spectrum» module.
In addition, the output oscillator is «coarse-tuned» to the frequency of a first oscillator that provides a signal containing the 1- and 10-MHz increments. This coarse tuning is effected by a digital phase-lock loop. The modules making up this part of the instrument are :
– The «1-MHz Spectrum», which includes a quartz-crystal oscillator locked to 50 MHz by a fixed phase-lock loop. This signal is multiplied by 2 and the frequency of the 87/116-MHz oscillator subtracted from it. The difference gives a new frequency that controls the two oscillators of the «Output Frequency» module via a digital phase-lock loop while at the same time improving the noise level of the output circuit.
– The «1 MHz Divider/Locking» module, which generates the 10^6 and 10^7 (1 bit) increments. This module provides partial locking of the 87/116-MHz oscillator by which the 1-MHz increments and 10-MHz increments are inserted. Final locking, by the phase comparator circuit in the «1-MHz Spectrum» module, is controlled by a digital circuit from the «Divicer» module. The «Divider» also includes the circuit used to lock the built-in oscillator to an external standard.
– The «Output Frequency» and «CPF» modules, which provide the output frequency ranging from 90 to 120 MHz in 10-Hz steps. The output oscillator is first coarse-tuned, then locked, to permit the insertion in the output frequency of all increments from 10^1 to 10^7 Hz (1 bit).
It should be noted that all of the phase/frequency comparators have alorm circuits controlling an LED on the front panel of the instrument to confirm that the output frequency is correct. When it is unlit, the output frequency is that set on the switches or programmed and may be used.

III.2 - GENERATION OF THE VARIABLE FREQUENCY

BASIC CIRCUIT (Phase lock loop)
The basic circuit of each decimal insertion unit is a phase lock oscillator (see figure III.1).

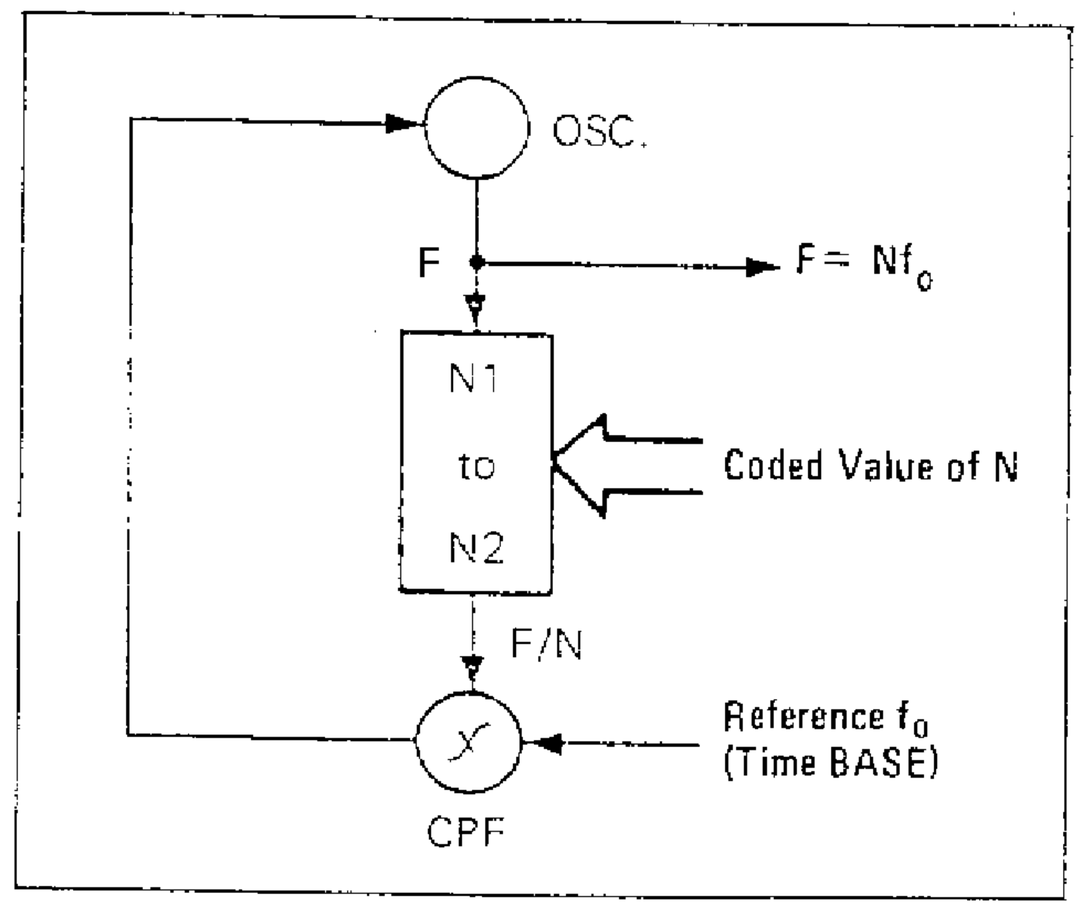

FIGURE III.1 : Frequency synthesis

An oscillator, OSC, provides a variable frequency, F, which is divided by a counter of which the divisor (programmable from N1 to N2) varies according to input value N corresponding to the digit to be synthesized (desired offset step in the case of the 5104).
The states of this counter are fed to a coincidence circuit that also receives the digit to be generated in BCD form ; when the count reaches the programmed value, N, the coincidence circuit resets the counter ; the resulting output frequency is F/N.
Frequency F/N so generated is compared to a reference frequency, Fo, derived from that of the master oscillator.
The comparator output is a control voltage, U, that modifies the frequency of the oscillator to satisfy the equation F = NFo ; F thus has the accuracy and stability of reference frequency Fo.

III.3 - PRINCIPLE OF THE PHASE/ FREQUENCY COMPARATOR (CPF)

Comparison is in two stages : first, a gate pulse proportional to the phase difference is generated ; then an analog voltage proportional to the original phase difference is derived from it. This comparator acts first as a frequency comparator, then as a phase comparator, whence the name «phase/frequency comparator».

The principle of operation and chronogram of the comparator are shown in figure III.2.

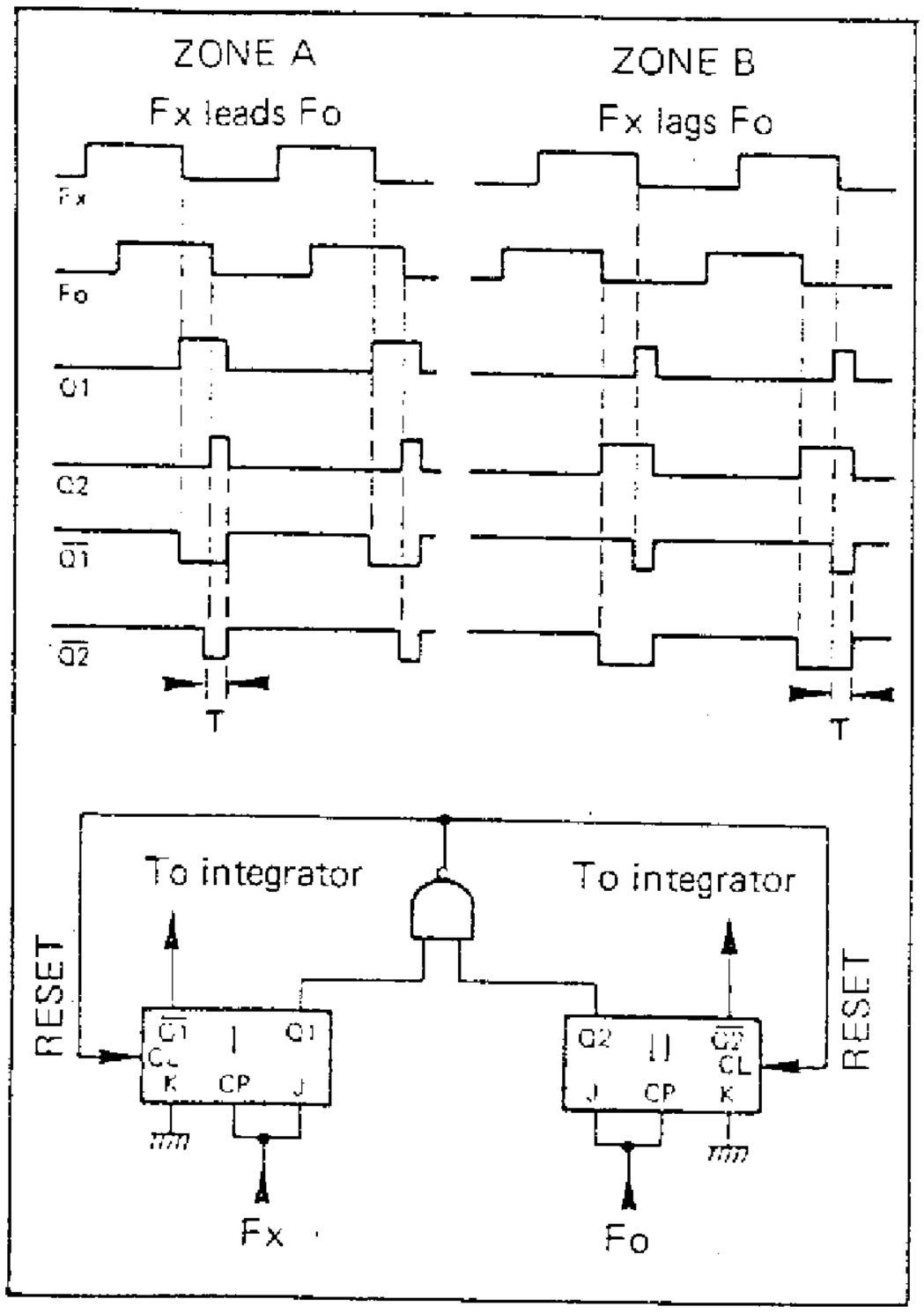

Let Fx be the output frequency of programmable divider DP1 and Fo the reference frequency.

In zone A of the chronogram, frequencies Fx and Fo are identical but out of phase. Since frequency Fx leads frequency Fo, flip-flop I changes states before flip-flop II.

It follows that the duration of output signal Q1 is greater than that of output signal Q2, since both bistables are reset by the NAND gate when outputs Q1 and Q2 have both reached state «1» ; the duration of Q2 is thus equal to the delay introduced by the NAND gate.

In zone B of the chronogram, frequency Fx lags Fo ; the duration of output signal Q1 is thus less than that of output signal Q2.

In both of the cases mentioned above, the durations of Q1 and Q2 tend toward equality at value as locking is effected.

In short :

Fx leads Fo	Q1 > Q2 = τ
Fo leads Fx	Q2 > Q1 = τ
Fx in phase with Fo	Q1 = Q2 = τ

If frequencies Fo and Fx are different, the phase difference is no longer constant and the durations of signals Q1 and Q2 also vary. However, it is always the flip-flop that receives the higher frequency that provides the longer pulses ; the system than acts as a frequency comparator.

FIGURE III.2 : Principle and chronogram of the CPF.

CHAPTER IV
MAINTENANCE

GENERAL

Troubleshooting the instrument is effected in two stages :
a) locate the malfunctioning subsystem.
b) repair or replace it.

The operating principles of the various modules are described in the preceding chapter. The following pages provide all necessary additional information for troubleshooting the various modules.

- block schematic ;
- fault diagnosis flowchart («fault tree») ;
- wiring diagram ;
- component layout diagram.

When a fault has been repaired, the instrument specifications are checked out as described in the next chapter.
Full parts lists are reproduced at the end of the manual.

TROUBLESHOOTING PROCEDURE

When troubleshooting the instrument, always proceed as follows :

1 - Check the power supply circuit.

2 - Determine the type of malfunction :
- output steps less than 1 MHz unobtainable ;
- 10 MHz and 100 MHz output steps unobtainable ;
- no output signal ;
- lock-on impossible ;
- programming ineffective.

3 - Refer to fault tree to identify subsystem responsible for malfunction. Refer to block schematic and full description of 5104 cards and modules for further information.

4 - Consult that part of this chapter indicated on the fault tree and referring specifically to the suspect subsystem. Troubleshoot the individual card or module according to the appropriate document (operating principles, wiring diagram, component layout diagram).

5 - Check that the malfunction has been eliminated and then proceed to the final check on instrument specifications (see chapter VI).

The remainder of this chapter is divided into nine sections, as follows :

1 - POWER SUPPLY
2 - SYBSYSTEM LOCATION
3 - FIRST GENERATION CARD
4 - SECOND GENERATION CARD
5 - INCREMENT MIXER MODULE
6 - 1 MHz SPECTRUM MODULE
7 - 1 MHz DIVIDER/LOCK-ON MODULE
8 - PHASE-FREQUENCY COMPARATOR MODULE
9 - OUTPUT MODULE

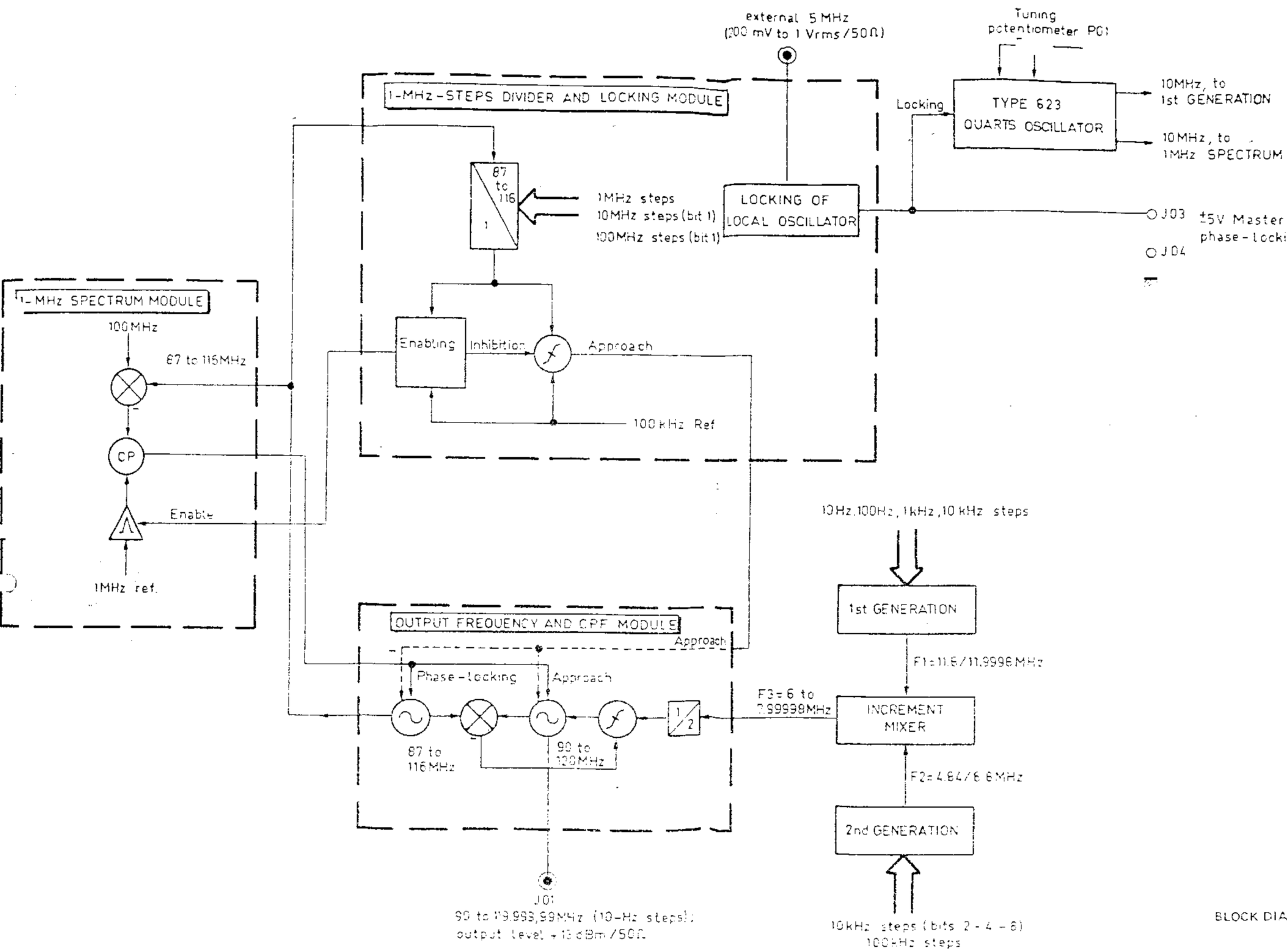
external 5 MHz
(200 mV to 1 Vrms/50Ω)
Tuning
potentiometer P01
1-MHz-STEPS DIVIDER AND LOCKING MODULE
87
to
116
1
1MHz steps
10MHz steps (bit 1)
100MHz steps (bit 1)
LOCKING OF
LOCAL OSCILLATOR
Locking
TYPE 623
QUARTS OSCILLATOR
10MHz, to
1st GENERATION
10MHz, to
1MHz SPECTRUM
J03
±5V Master
phase-locki
J04
1-MHz SPECTRUM MODULE
100MHz
87 to 116MHz
CP
Enable
1MHz ref.
Enabling
Inhibition
Approach
100kHz Ref
10Hz,100Hz, 1kHz, 10 kHz steps
1st GENERATION
F1=11.8/11.9998MHz
OUTPUT FREQUENCY AND CPF MODULE
Approach
Phase-locking
Approach
F3=6 to
7.99998MHz
INCREMENT
MIXER
1/2
87 to
116MHz
90 to
120MHz
F2=4.84/6.8MHz
2nd GENERATION
J01
90 to 119.999,99MHz (10-Hz steps);
output level +13 dBm/50Ω
10kHz steps (bits 2 - 4 - 8)
100kHz steps

BLOCK DIA

1 - POWER SUPPLY

Documentation

Fault tree

Circuit diagram N° 973016

Wiring and component layout diagrams :
- transformer N° 931392 C
- rectifier/filter card N° 932142
- regulator card N° 931502
- power transistor mounting N° 931504.

Instruments and equipment required

Multimeter.

Carry out the checks indicated on the fault tree referring to the circuit diagram and wiring and component layout diagrams where necessary.

FAULT TREE

Key to Drawing 1 (Planche 1)

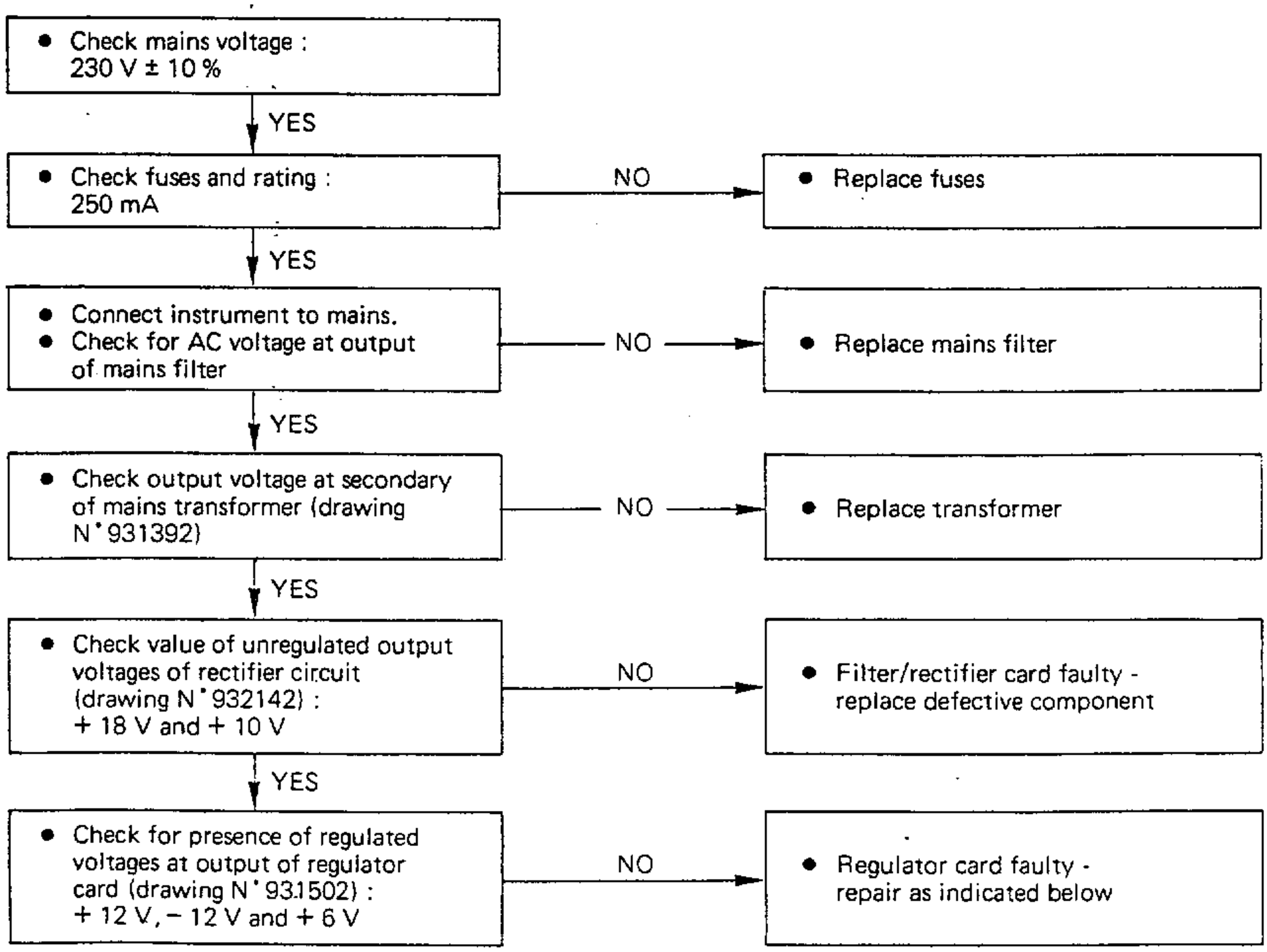

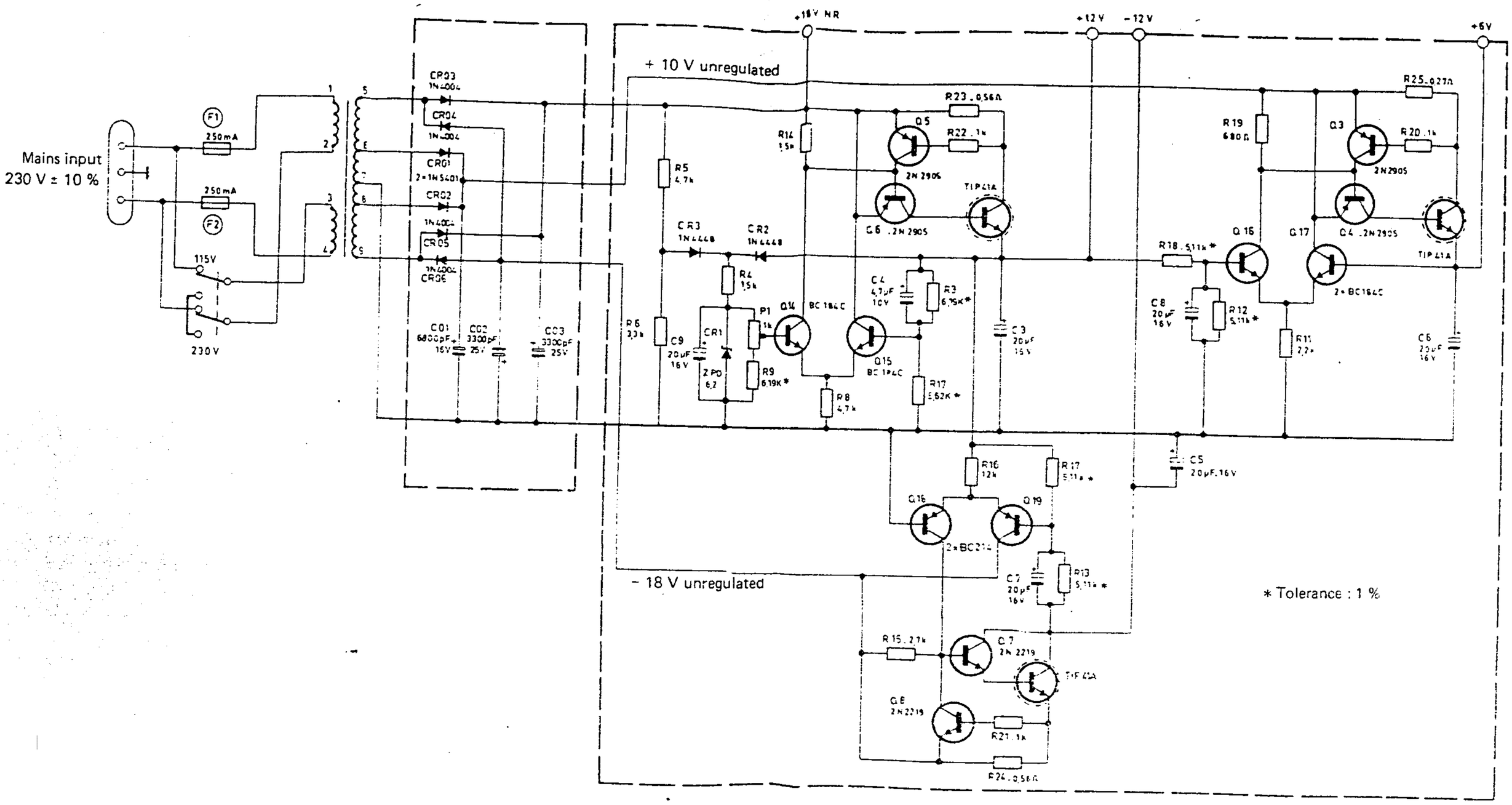

		DATE JUIL 1975
ETUDIE DESSINE VERIFIE	POWER SUPPLY	PAGE 973016

CIRCUIT MAGNETIQUE

Toles FA35 T32 Qualité

Epaisseur 32 Imbriqué
Entrefer
(épaisseur de la cale)

ASSEMBLAGE

	Type	N.bre
vis tiges filetées		
barrettes équerres étriers		
Divers	Cadre à fixation latérale sans colonnettes (type T) Isolectra	2

BOBINAGE

Carcasse Isolectra 2696

Finition Presspahn

NOTA Les fils de diamètre ≤ 50 100 doivent être raccordés en fils souple 7 x 0.2

TRAITEMENT

Circuit Vernis vide - pression } ~~avant~~ aprés assemblage

Bobine } aprés assemblage

ENROUL.nt	Nbre de sp.	DIAMETRE	QUALITE	V. eff.	I. eff.	V.A.	SORTIES
1	650	32/100	Email	115			fils 20 cm Code Couleur
2	650	32/100	Email	115			fils 20 cm Code couleur
3	ECRAN A LA MASSE						
4	35 + 57 + 57 + 35	65/100 120/100 120/100 65/100	Email " " "	6 10 10 6			Fils de 10 cm au code couleur

ISOLEMENT				
	1-2 1000 V	3-4 500 V	~~5-6~~	4-⏚ 500 V
⏚-1 1500 V	2-3 1500 V	~~4-5~~	~~6-7~~	

SCHEMA - PRESENTATION

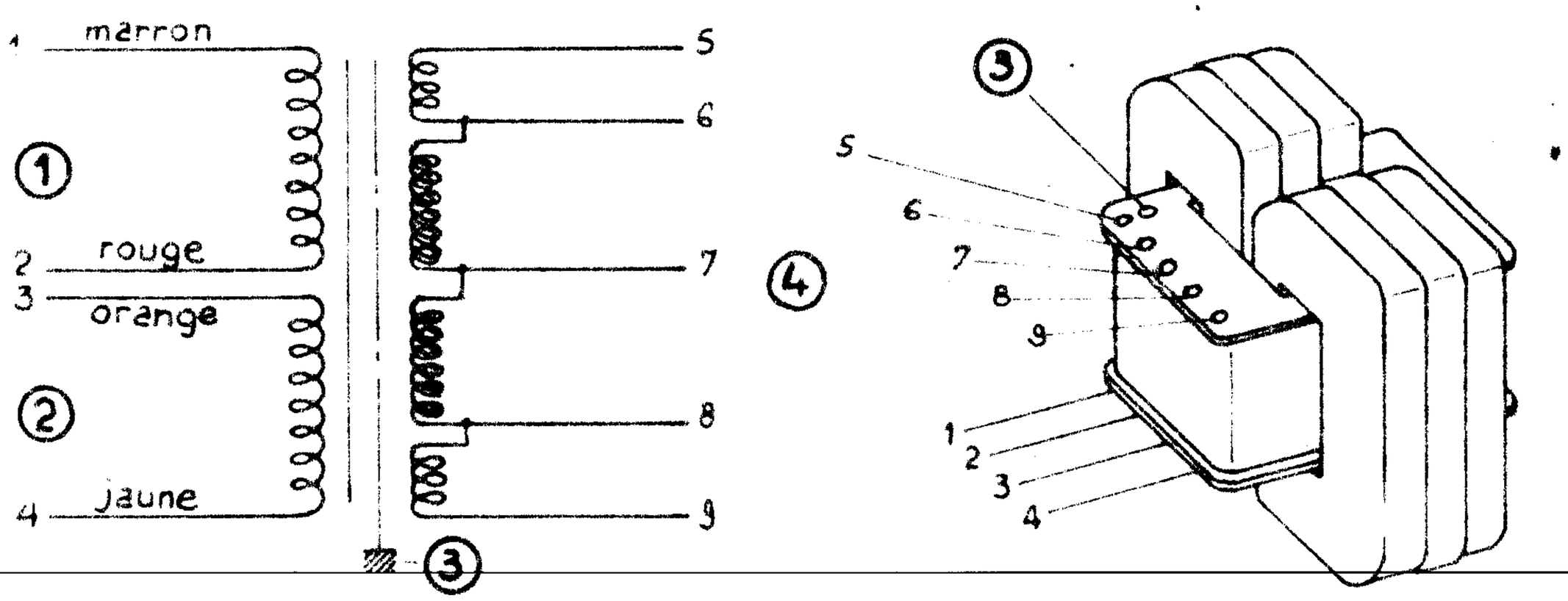

1/2 : quage des N° de plan et de Code

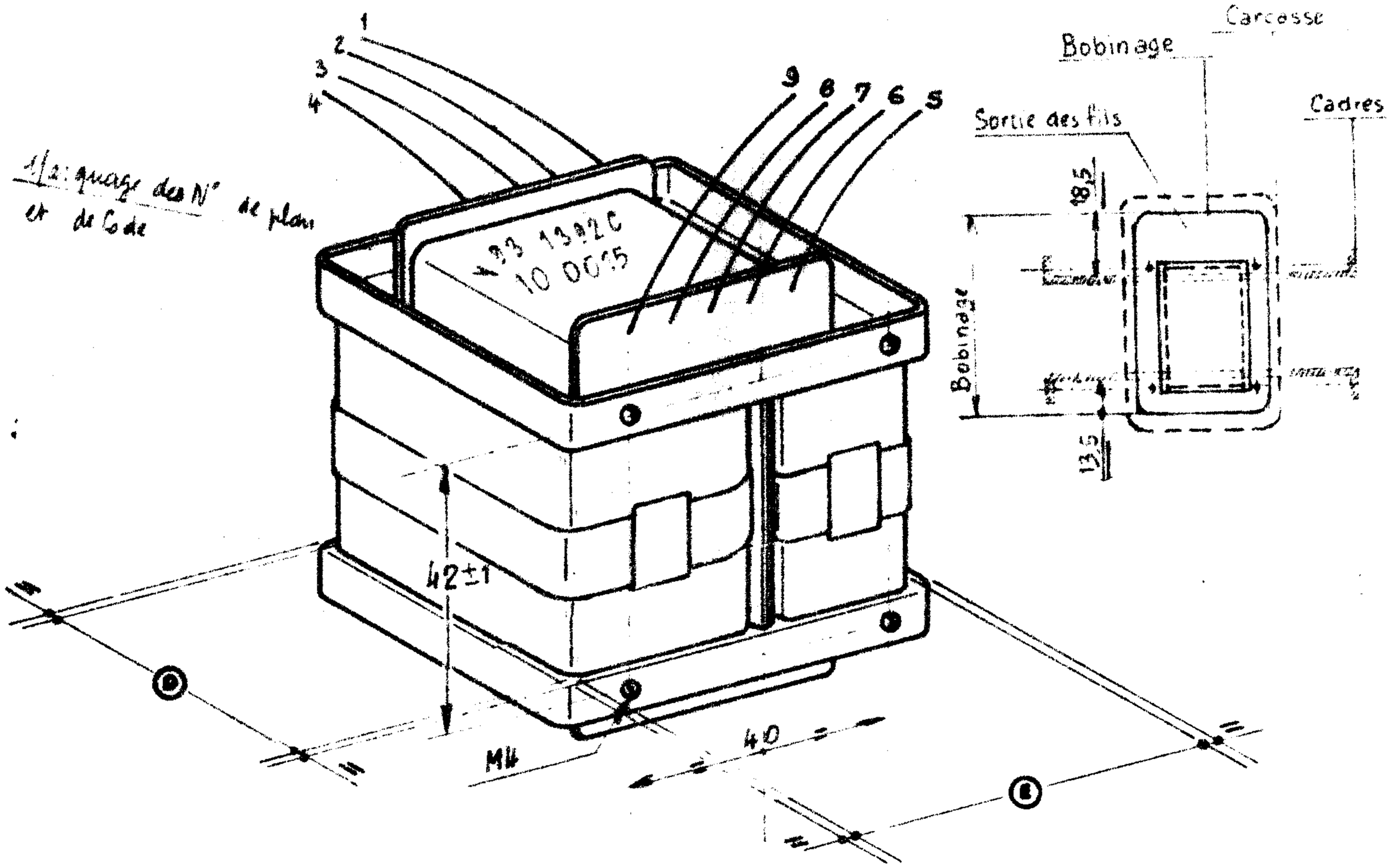

NOTA 1 : *Au montage, les axes aa et a'a' devront être dans un même plan Ⓐ. Les plans Ⓐ et Ⓑ devront être parallèles entre eux et perpendiculaires au plan Ⓒ.*

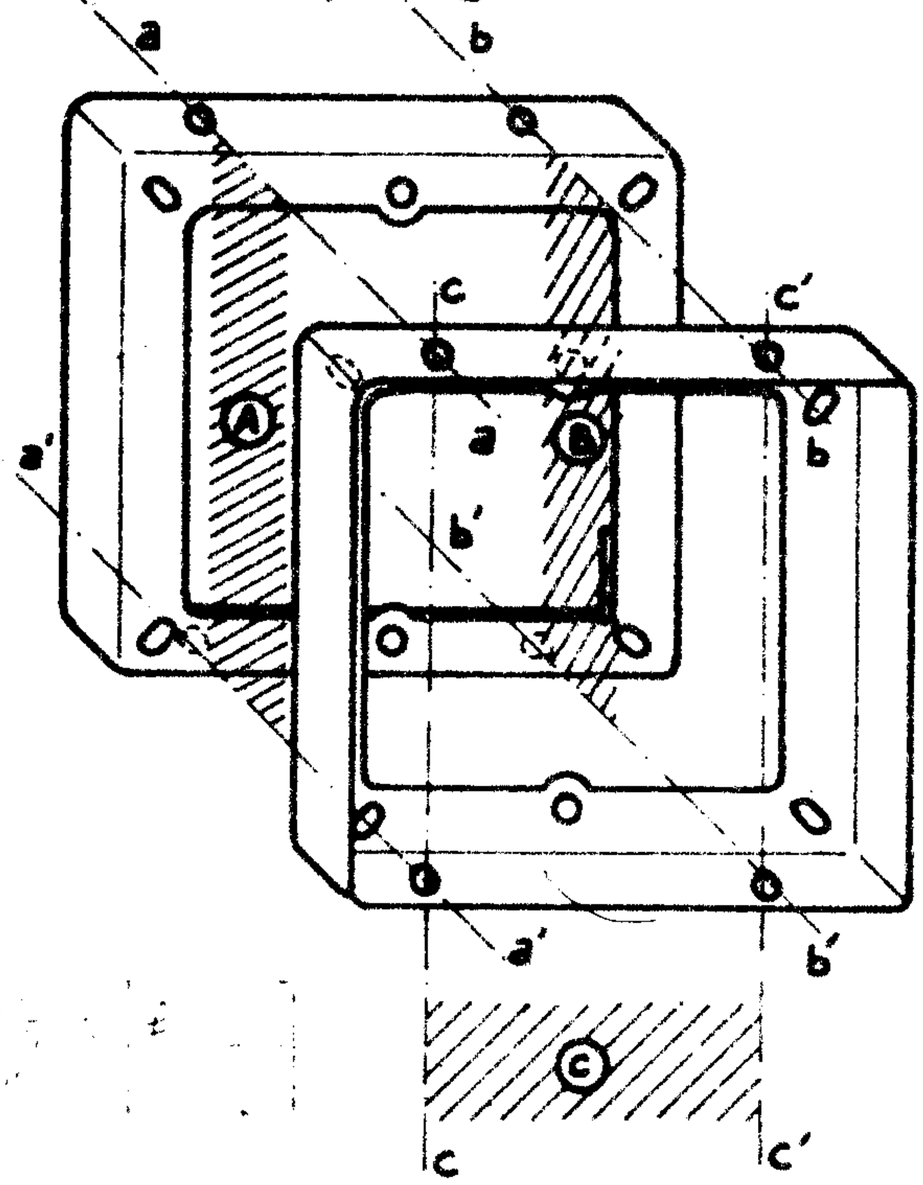

Les circuits (Ⓓ, Ⓔ) seront centrés par rapport aux cadres.

Très important : *l'épaisseur de la boucle de cerclage ne devra pas excéder 3,5 mm soudure comprise.*

La boucle de cerclage sera sur la face du côté sortie des fils numérotés de 5 à 9 (Impératif).

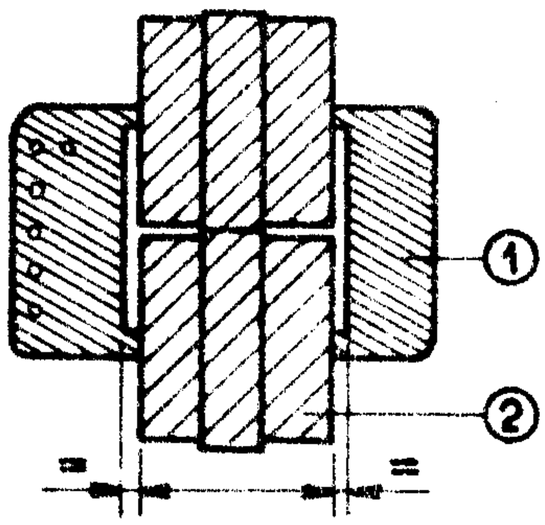

NOTA 2 : *Les circuits ② seront centrés dans l'ouverture de la carcasse ①*

Ex : 4248 P2

Traitement /		Matière /	
Protection /		Tolérance /	Echelle /
Etudié /	Dessiné AR	Vérifié	Date 29.10.74

Ce document ne peut être communiqué ou reproduit sans autorisation

adrat ae electronique — Av. Victor Hugo — 93 MARLY — Tél. 1 WAIPES — Tél. 4102 81 50

Ensemble Alim. 2U

TRANSFORMER N° 931392 C

93 1392 C

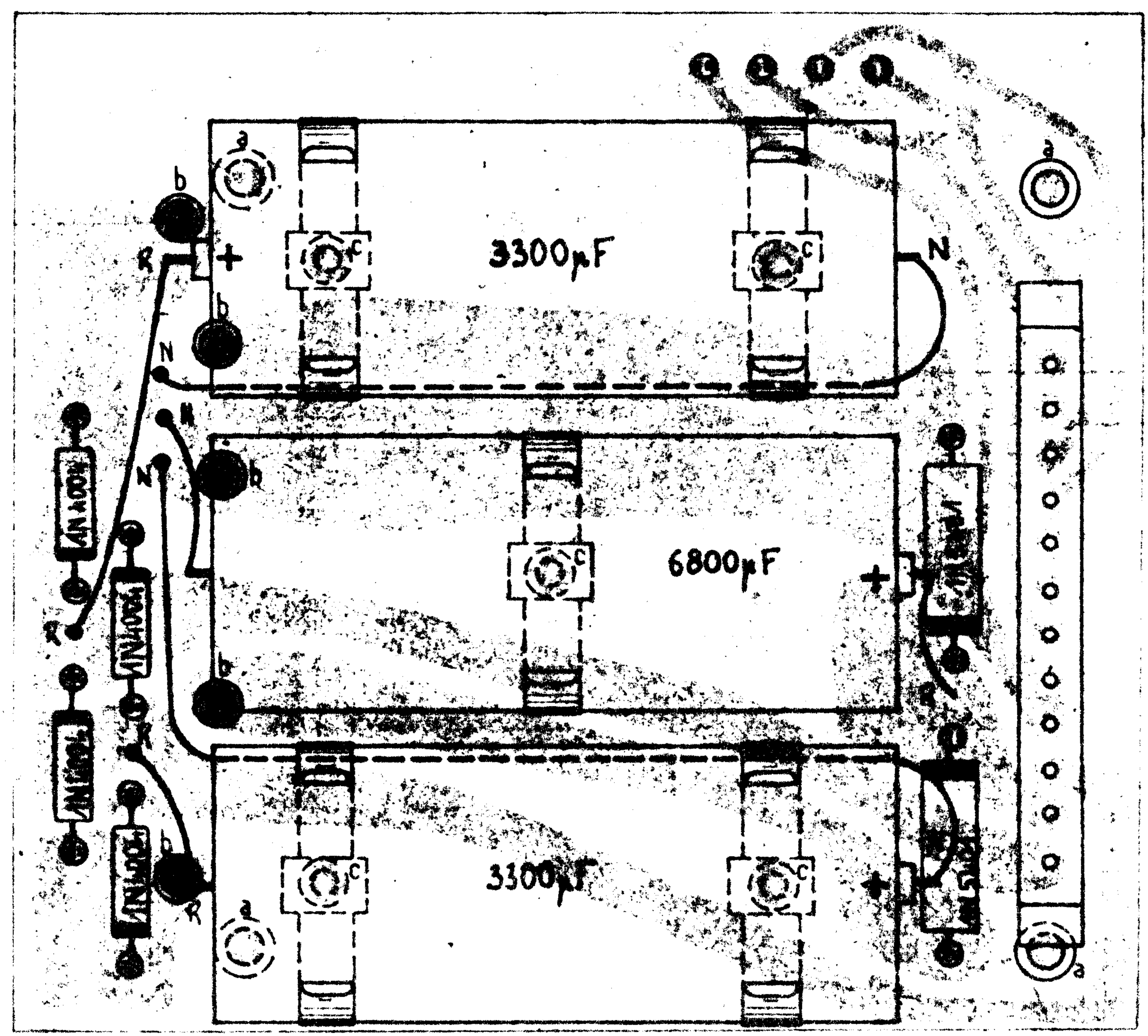

RECTIFIER/FILTER CARD N° 932142

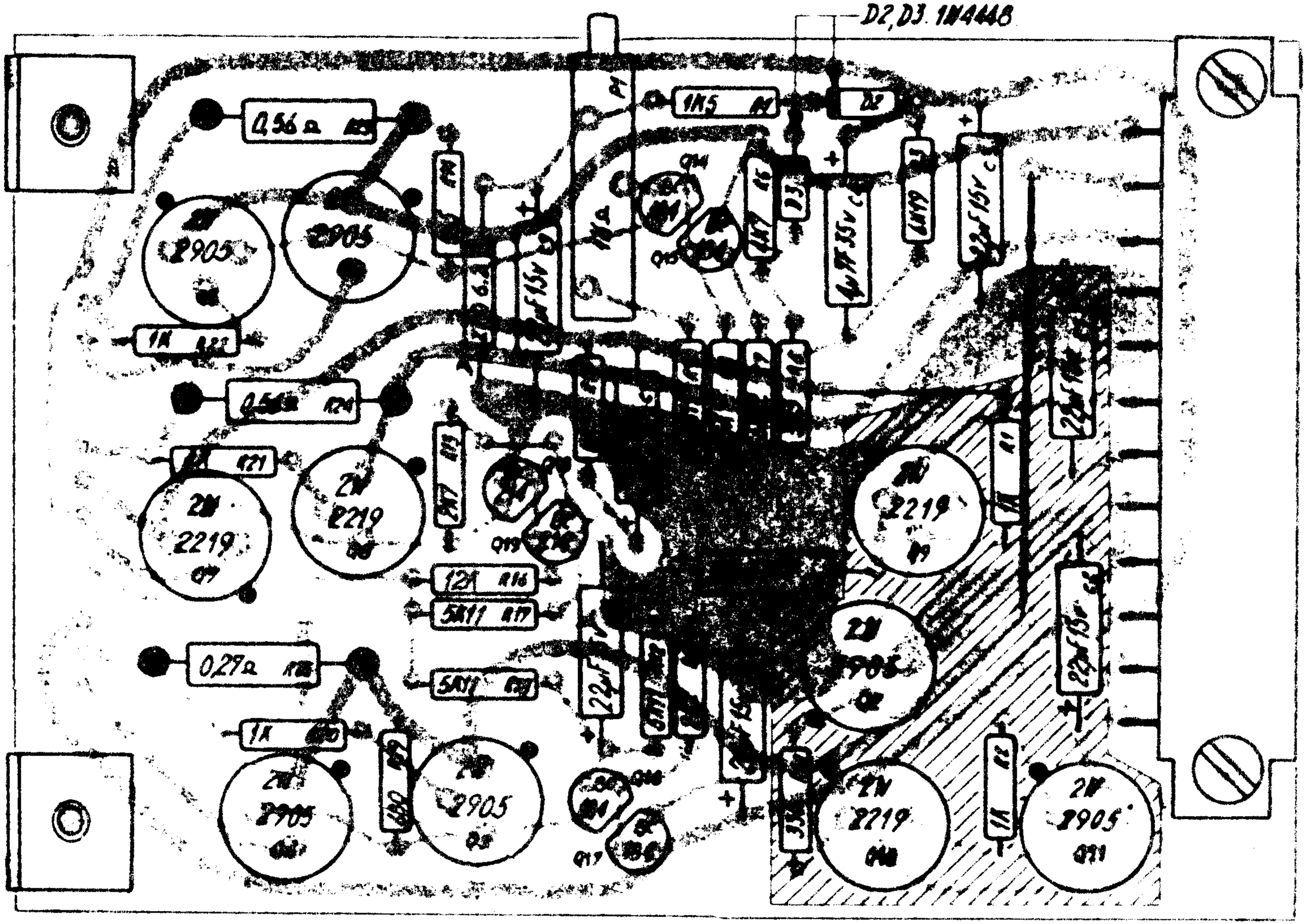

REGULATOR CARD N° 931502

POWER TRANSFORMER MOUNTING DETAILS

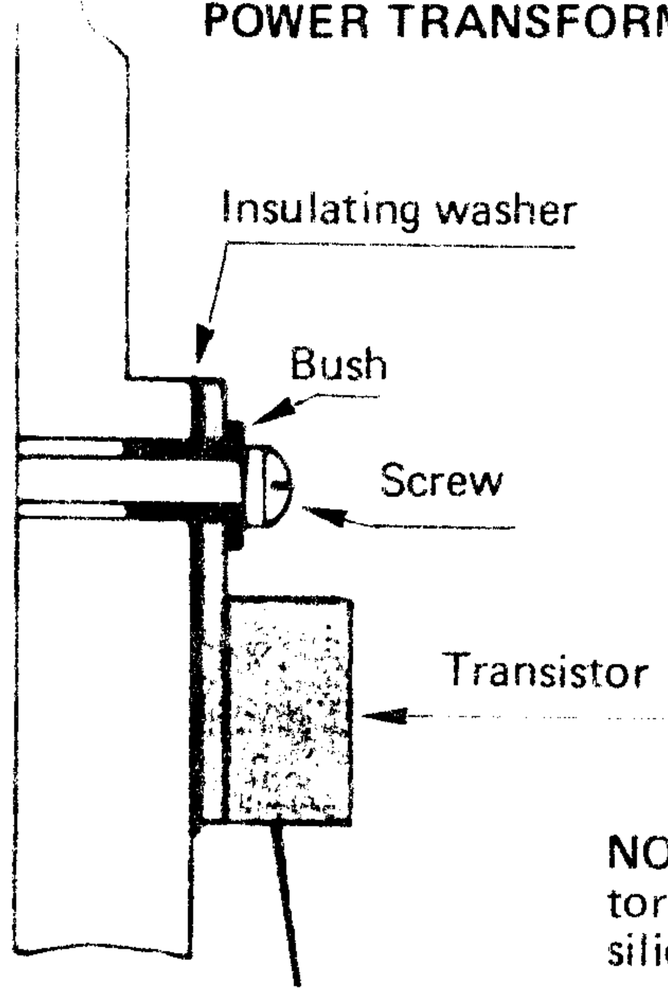

NOTE : Before fitting transistors coat insulating washer with silicone grease (690027).

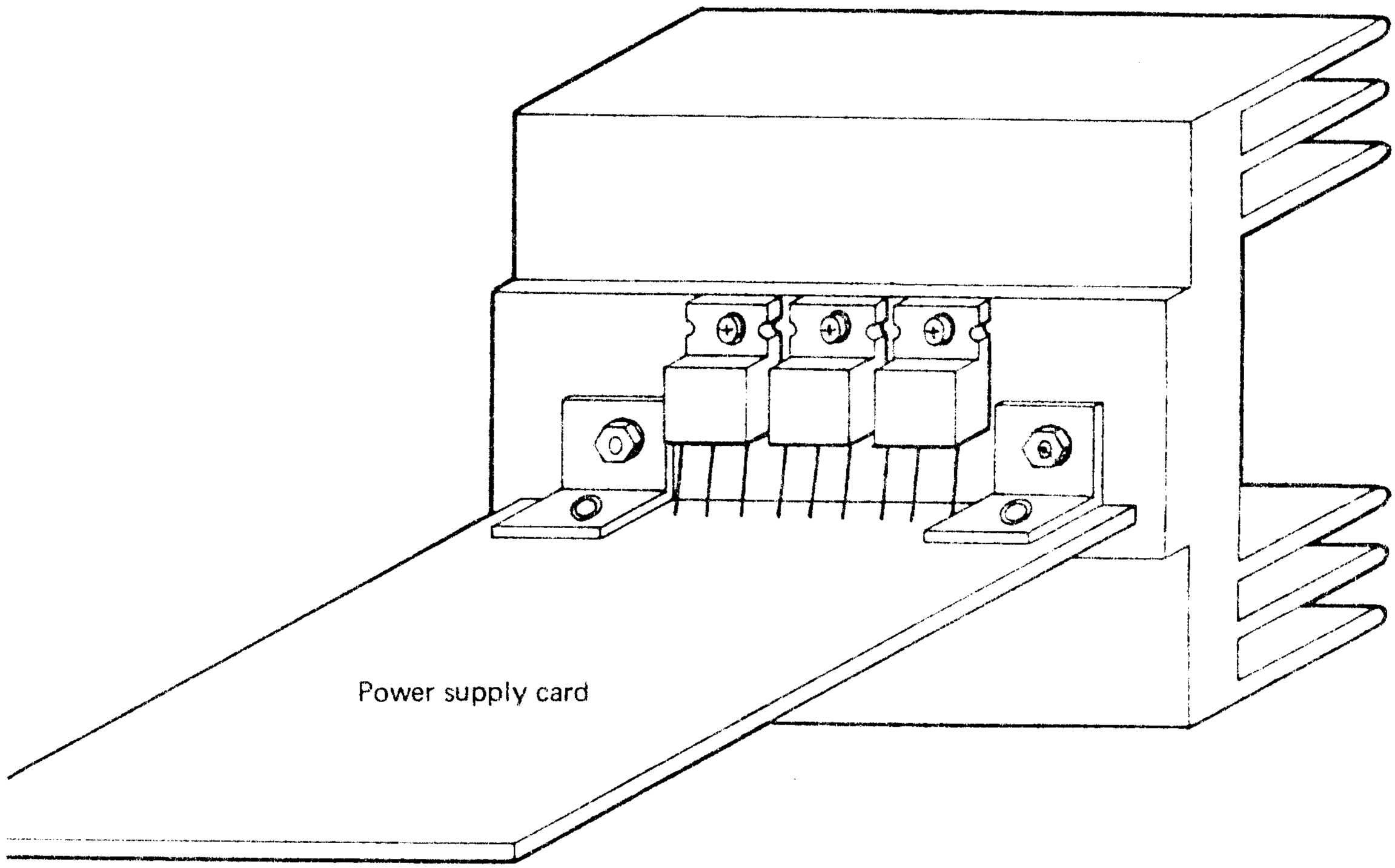

POWER TRANSISTOR MOUNTING N° 931504

2 - SUBSYSTEM LOCATION

Documentation

Fault tree

Block schematic

Subsystem layout and coaxial links

Instruments and equipment required

Oscilloscope

Frequency meter

Spectrum analyser

Carry out the checks indicated on the fault tree referring to the circuit diagram and wiring and component layout diagrams where necessary.

5104 : OUTPUT FREQUENCY MALFUNCTION

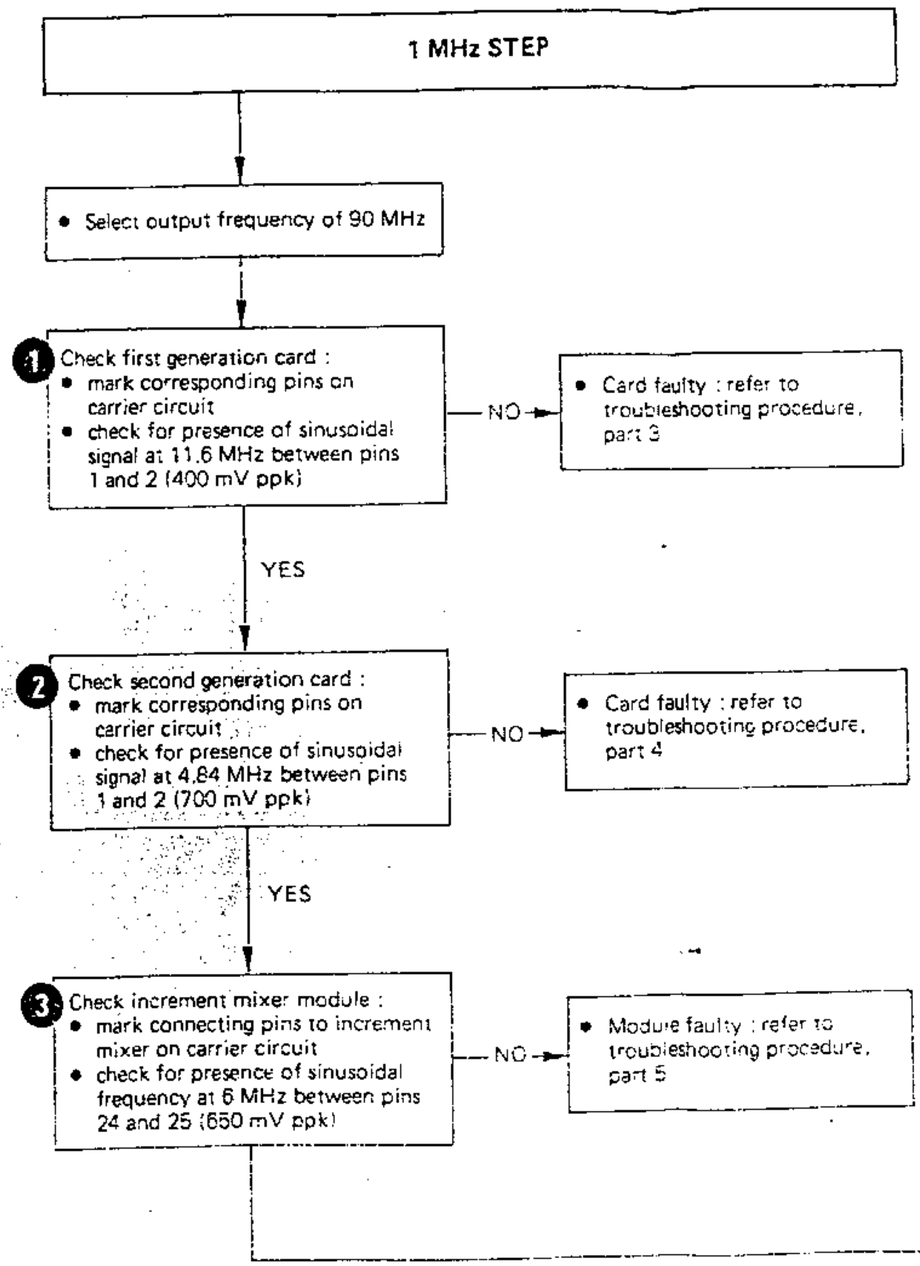

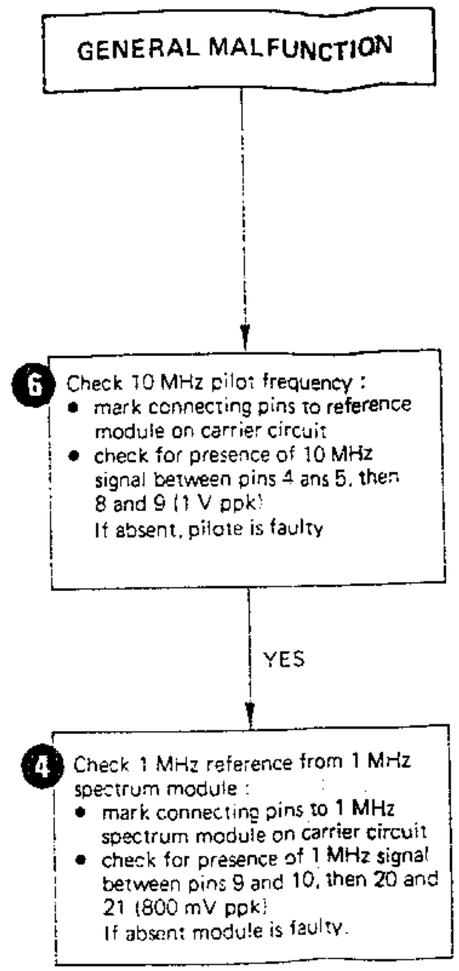

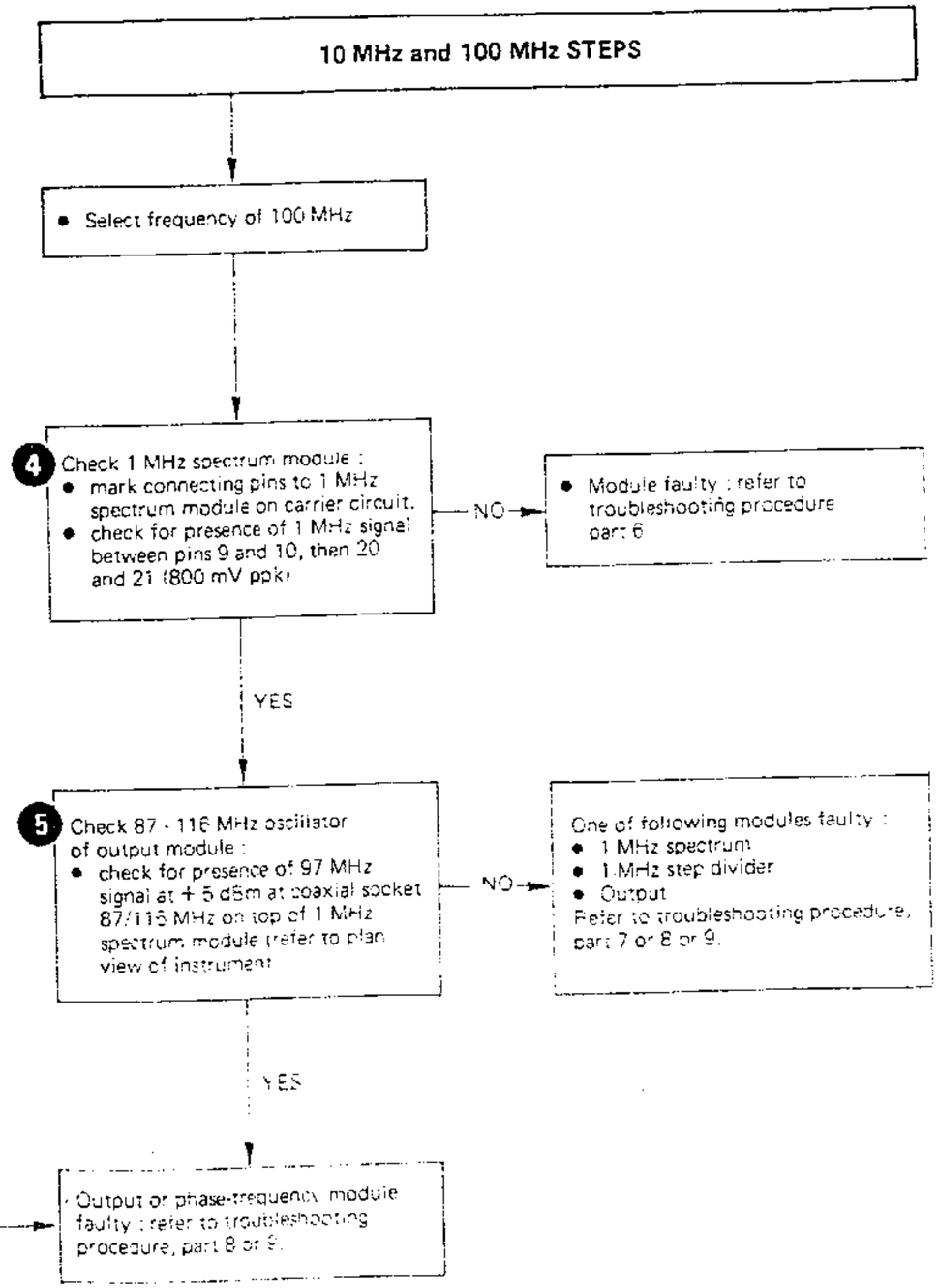

FAULT TREE

BOTTOM VIEW

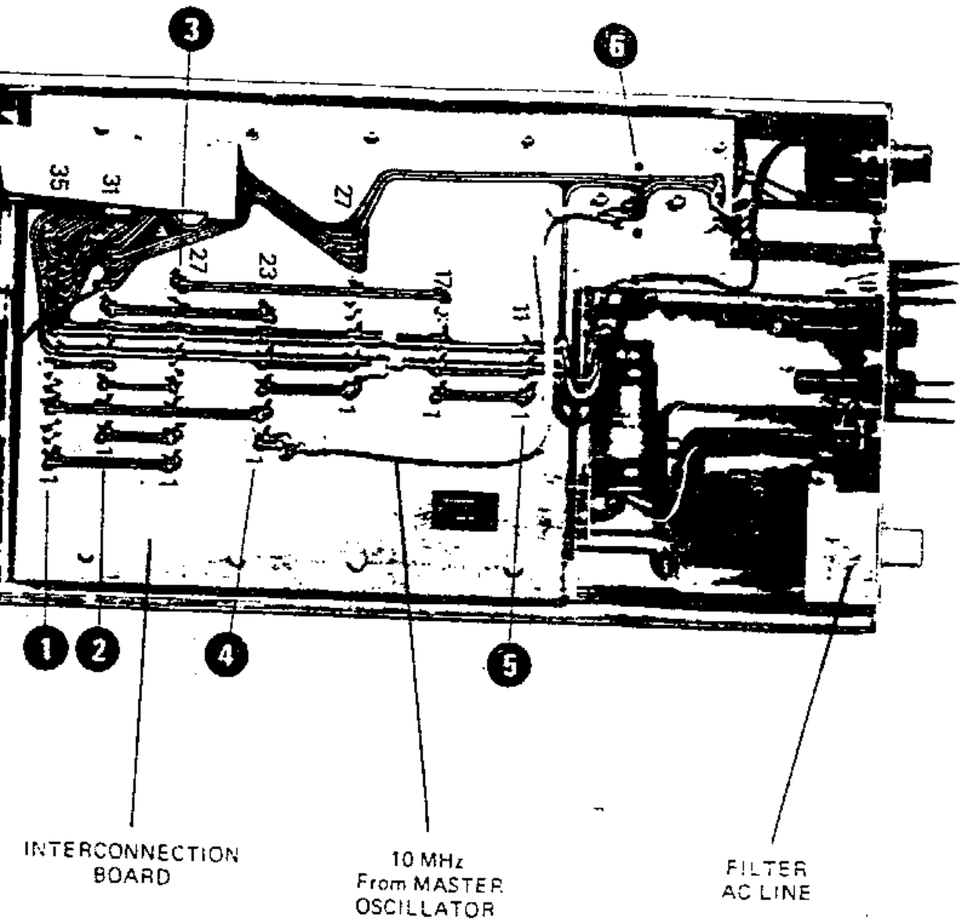

0 - 6 : see Fault tree

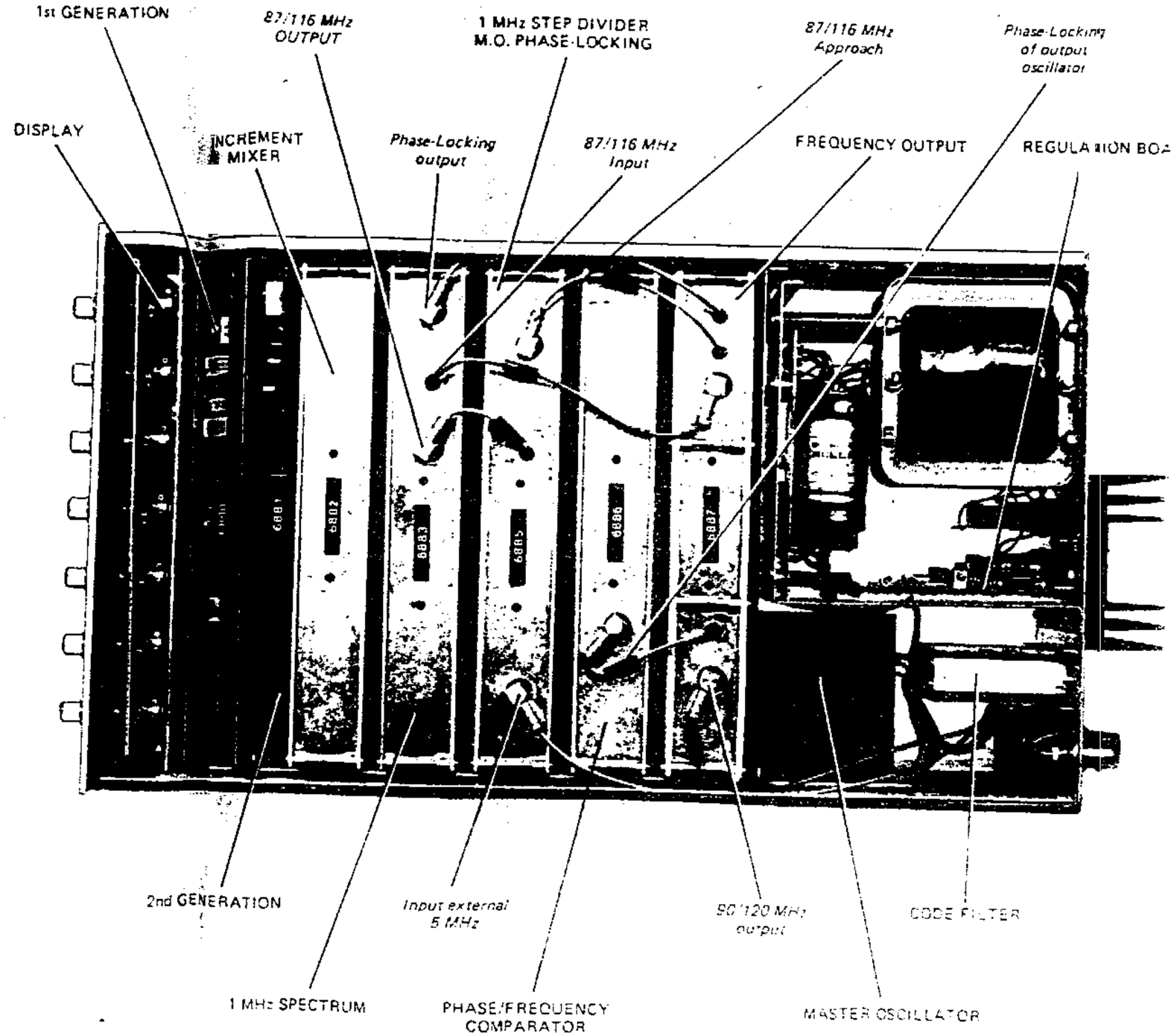

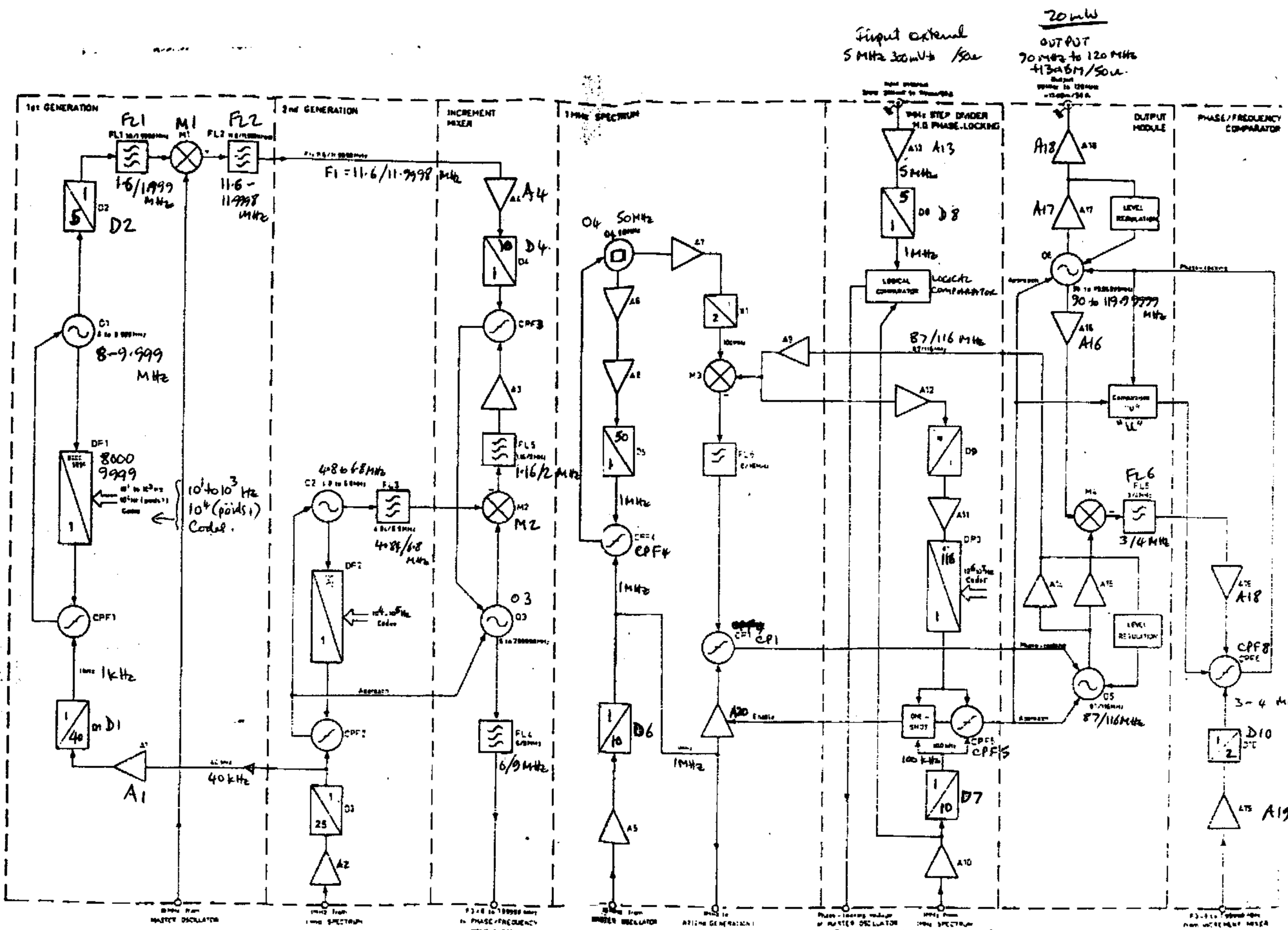

OVERALL DIAGRAM

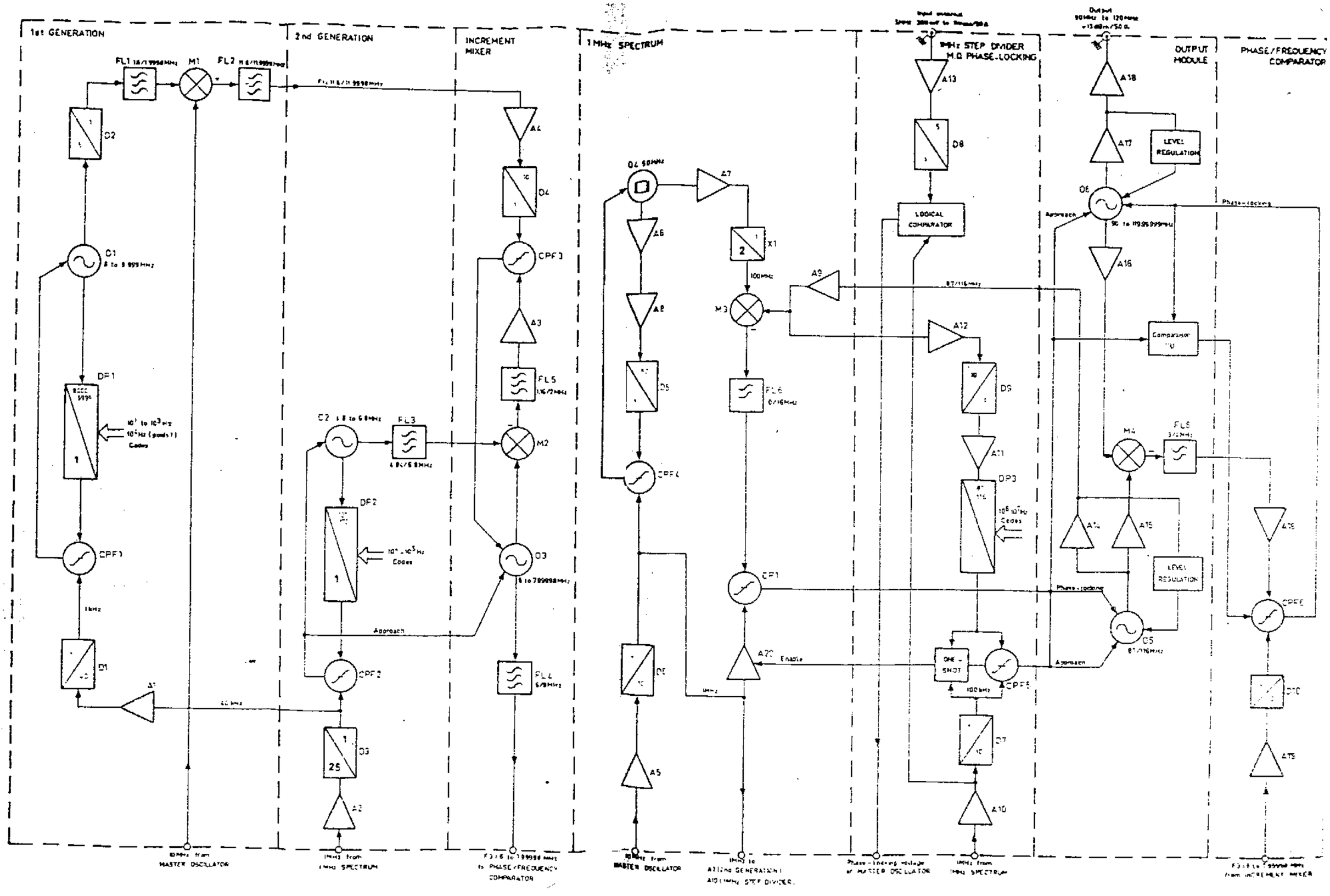

OVERALL DIAGRAM

3 - FIRST GENERATION CARD

Documentation

General description and operating principles.

Fault tree.

Circuit diagram N° 976880.

Wiring and component layout diagram N° 932129 2/2.

Instruments and equipment required

25 MHz oscilloscope.

Card extender.

Carry out the checks indicated on the fault tree referring to the circuit diagram and wiring and component layout diagrams where necessary.

PRINCIPLE OF FIRST GENERATION

The First Generation generates the increments corresponding to the 10^1 Hz, 10^2 Hz, 10^3 Hz and 10^4 Hz (1 bit) steps. It is controlled either by four of the seven decimal switches or by an external program.
Figure IV.1 shows the principle of the FIRST GENERATION board and Plate N° 976880 is its circuit diagram.

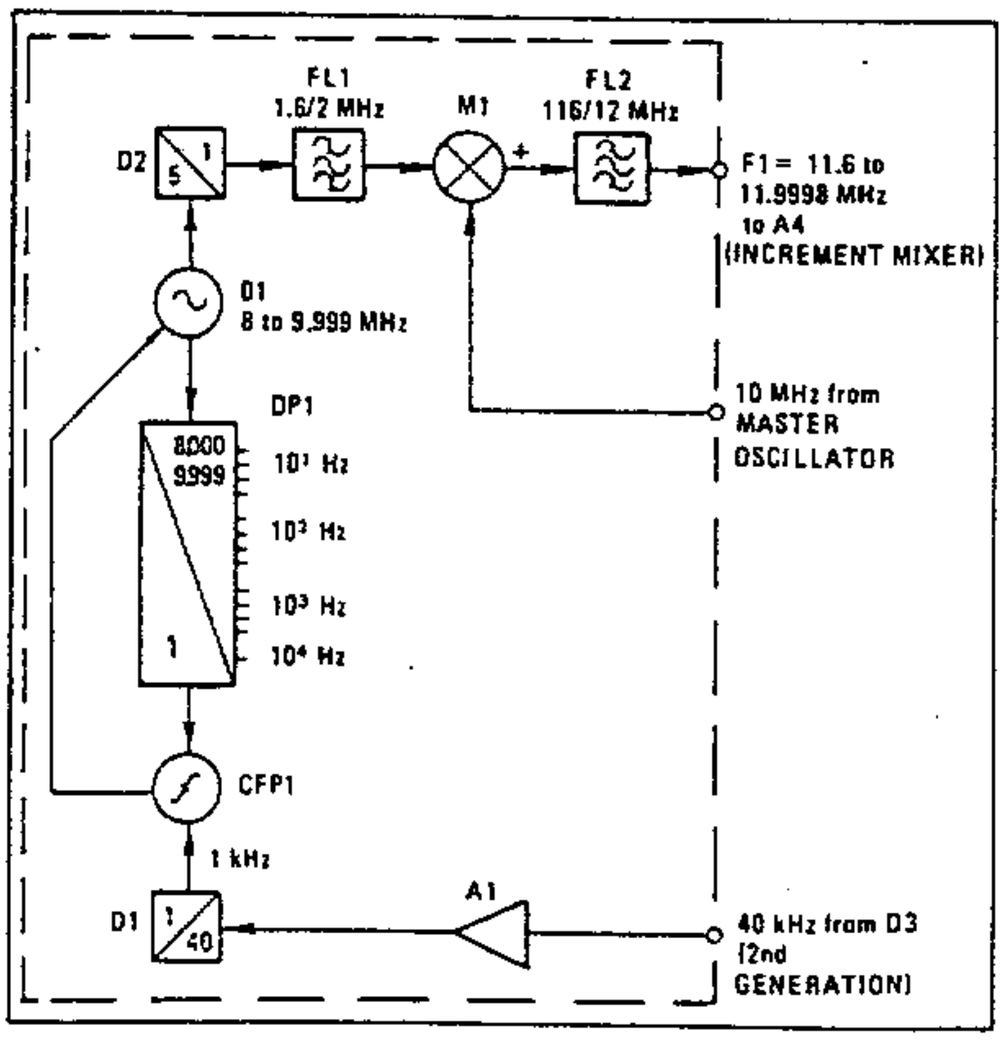

FIGURE IV.1 : Principle of the first generation

The first generation includes a phase lock loop with an oscillator, **01**, providing a frequency ranging from 8 to 9.999 MHz in 1-kHz steps. This frequency is fed to the input of programmable divider **DP1**, the divisor of which ranges from 8000 to 9999 as a function of the switch settings or external program.
The output frequency of divider **DP1** is fed to the input of phase/frequency comparator **CPF1**, which also receives a 1-kHz reference frequency derived from the frequency of the 1-MHz spectrum by division by 1000. The DC output of CPF1 controls oscillator **01** so as to satisfy the following equation :

$$F = NF_0$$

in which F is the frequency of **01**, N the divisor of **DP1**, and F_0 the reference frequency.

NOTE : ***The phase/frequency comparator has an «alarm» circuit that is validated whenever the oscillator is not locked. The alarm signal acts on a logic circuit in the SECOND GENERATION board that actuates on LED on the instrument's front panel.***

Oscillator 01 also feeds the frequency ranging from 8 to 9.999 MHz to the input of divider D2. D2 is a fixed counter dividing by 5, and its output frequency ranges from 1.6 to 1.999,8 MHz. This is filtered and fed to mixer M1, which receives a fixed 10-MHz frequency directly from the MASTER OSCILLATOR on its switching input.
The additive beat of these two frequencies produces, at the output of M1, frequency F1, which ranges from 11.6 to 11.999,8 MHz in 200-Hz steps. This signal is fed to the INCREMENT MIXER MODULE.

PRINCIPLE OF THE PROGRAMMABLE DIVIDER

Figure IV.2 shows the principle and chronogram of the 8000/9999 divider.

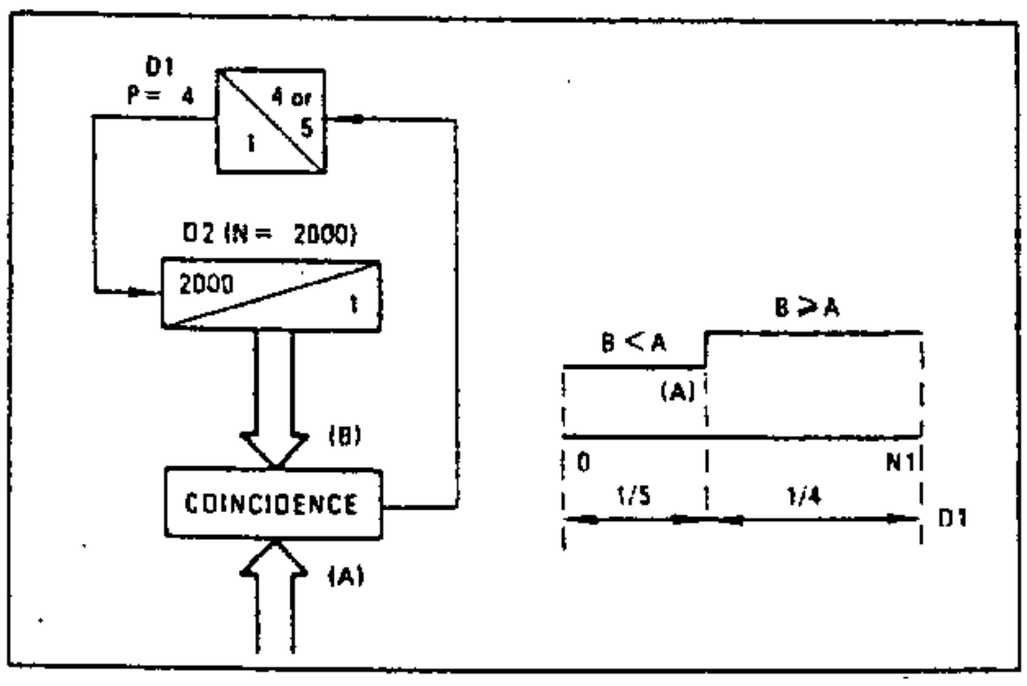

FIGURE IV.2 : Principle of the 8000/9999 Counter.

D1 : divides by 5 (P + 1) with a «0» level applied to input (2) and by 4 (P) with a «1» level applied to input (2).
The 8000/9999 divider has a first-stage divider, D1, that divides by 4 or 5 depending on the logic level («1» or «0») fed to input (2).
D1 is connected to a second divider, D2, having a fixed divisor of 2000, which feeds a signal (B) to the amplitude comparator, which also receives a signal (A) ranging from 0 to 2000 derived from the programming codes generated either by the front-panel decimal switches or by an external program.

The comparator applies a «0» level to input (2) of D1 while B is less than A, thus causing D1 to divide by 5. When B is equal to or greater than A, the logic level appmied is «1» and the divisor 4.
The resulting divisor can be expressed as follows :

$$(P + 1)\ A + (N - A)\ P$$

If, for example, A = 800, the divisor is (5 x 800) + 4 (2000 − 800) = 8800, and the counter divides by 8800.

FAULT TREE

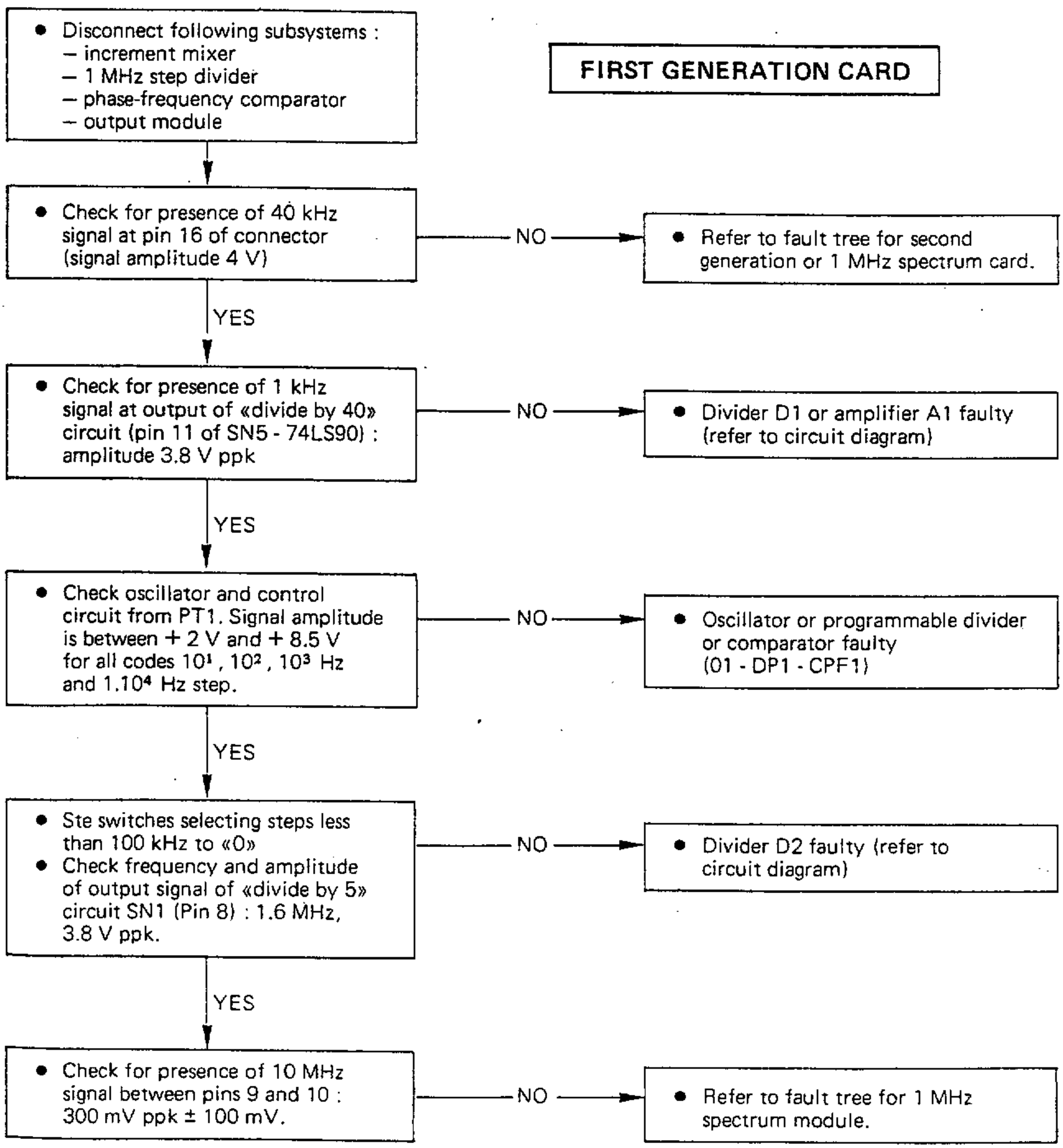

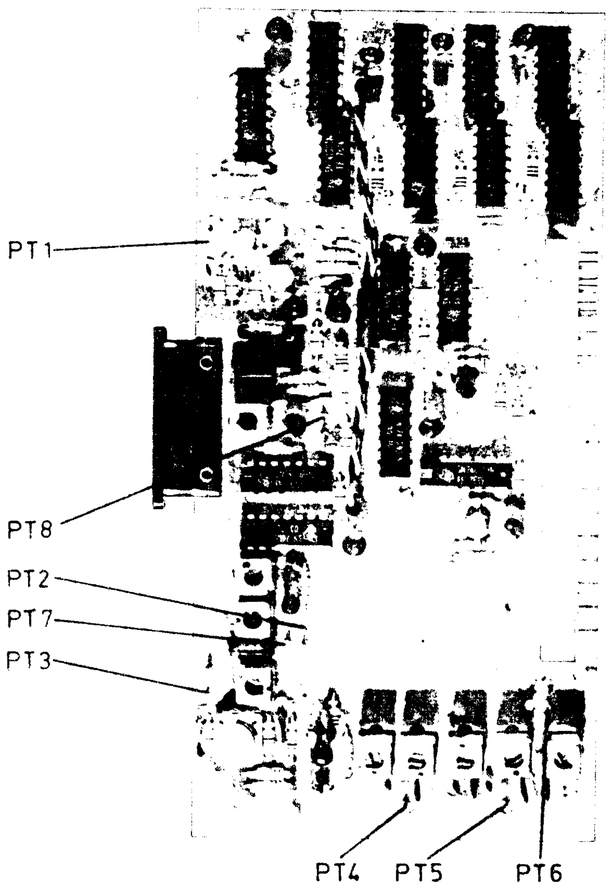

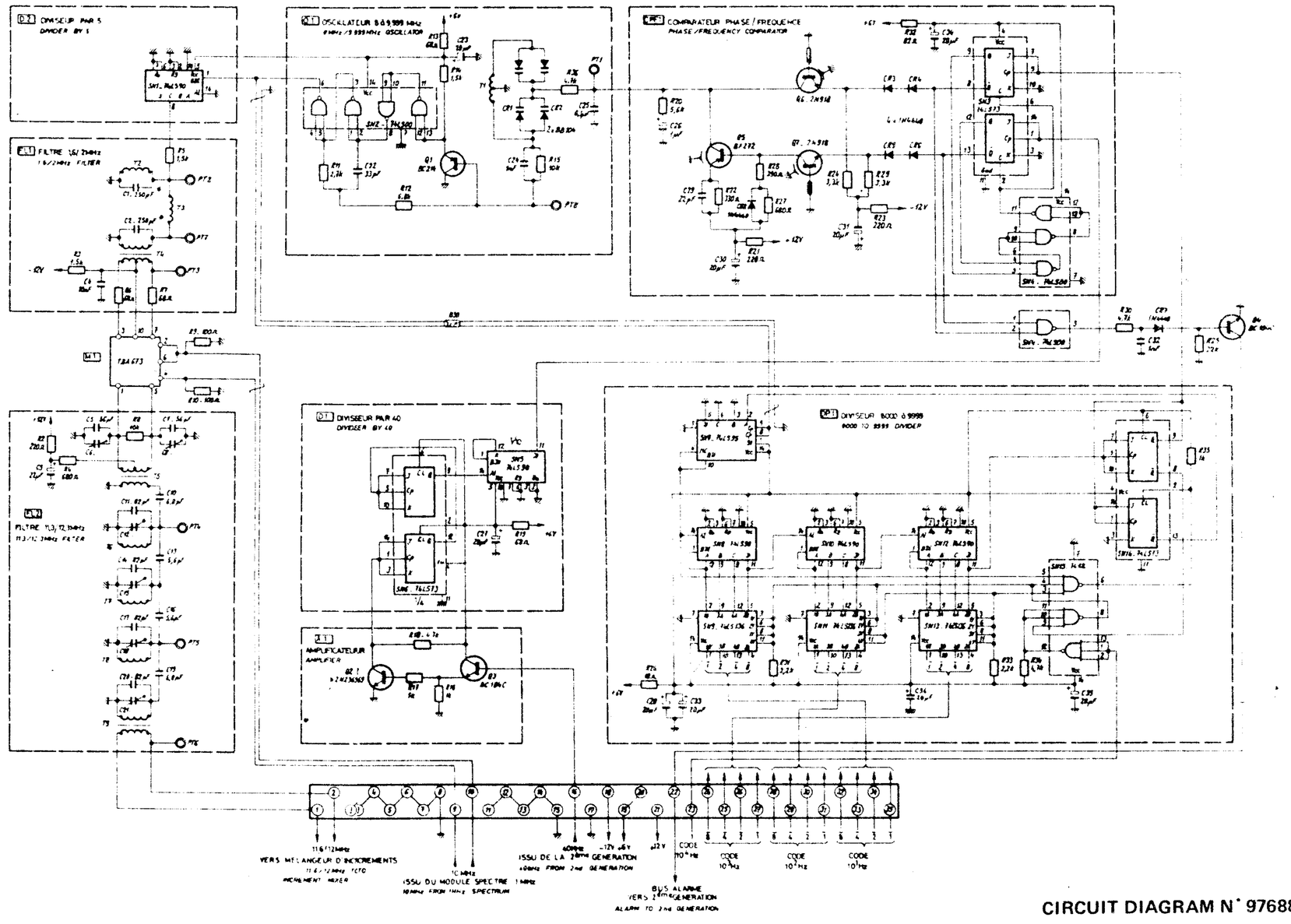

CIRCUIT DIAGRAM N° 976880

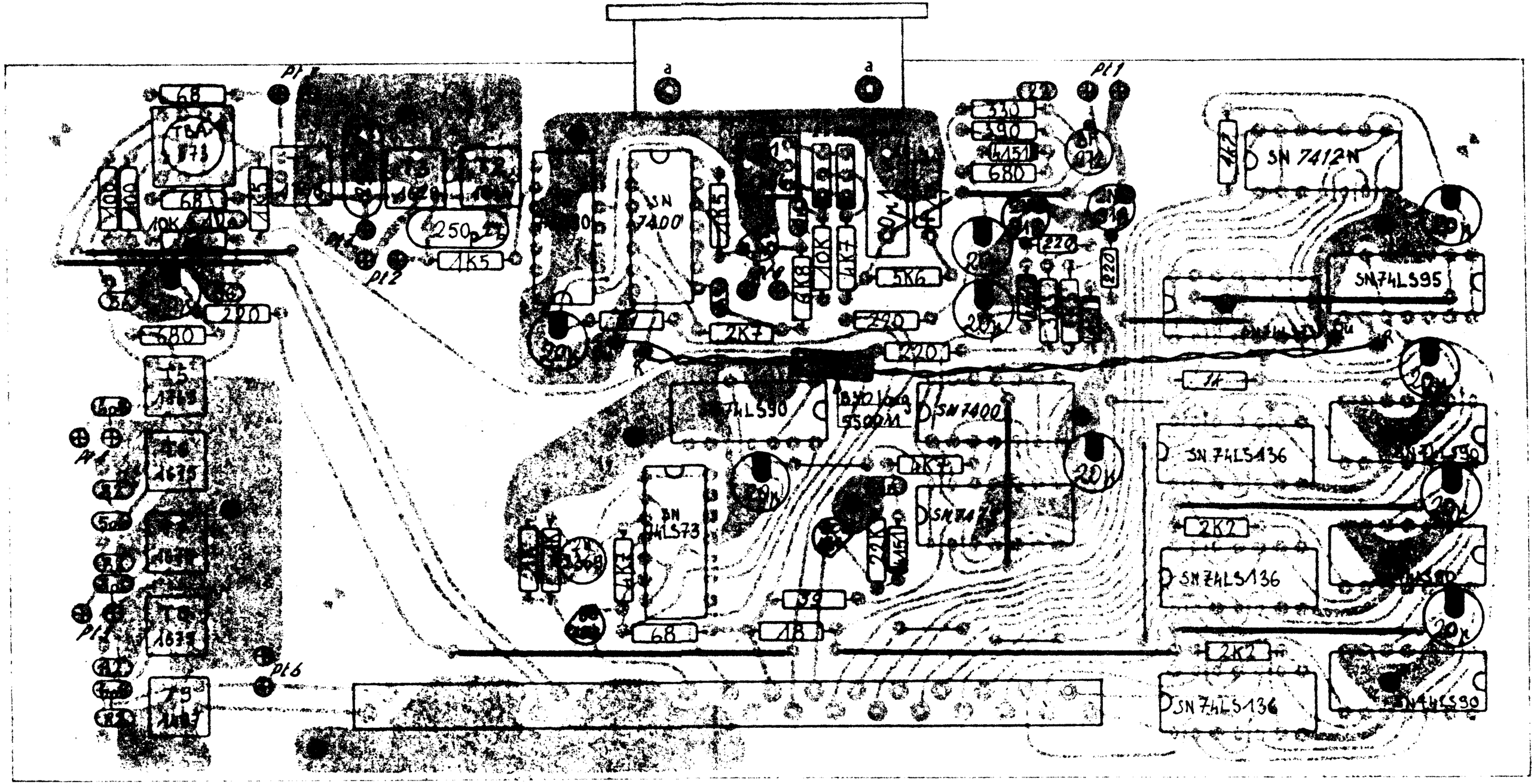

WIRING AND COMPONENT LAYOUT
DIAGRAM N° 932129 2/2

4 - SECOND GENERATION CARD

Documentation

General description and operating principles.

Fault tree.

Circuit diagram N° 976881.

Wiring and component layout diagram N° 932180 2/2.

Instruments and equipment required

Oscilloscope.

Card extender.

Carry out the checks indicated on the fault tree referring to the circuit diagram and wiring and component layout diagrams where necessary.

PRINCIPLE OF THE SECOND GENERATION

The second generation generates the increments corresponding to the 10^4 Hz (2, 4 and 8 bits) and 10^5 Hz codes, controlled either by two decimal switches or by an external program.
Figure IV.3 shows the principle of the second generation and Plate N° 976881 is its circuit diagram.

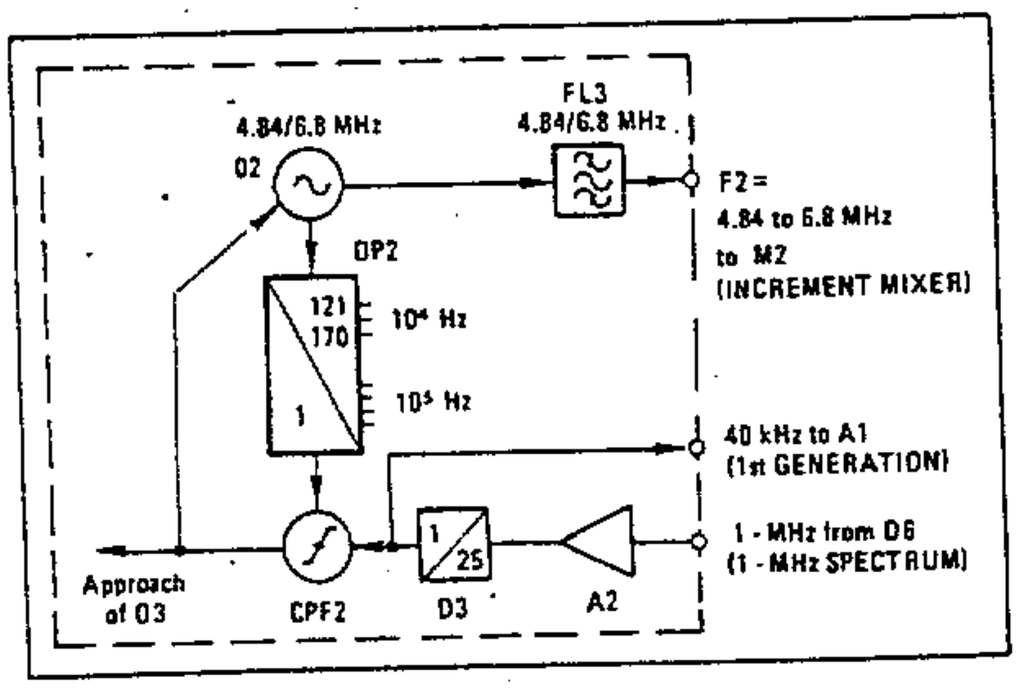

FIGURE IV.3 - Principle of the second generation.

Much simpler than the first generation, this board has only a divider and an output filter in addition to its phase lock loop.
The phase lock loop includes an oscillator, O2, providing a frequency ranging from 4.84 to 6.8 MHz is 40-kHz steps. This is fed to the input of programmable divider DP2, the divisor or which ranges from 121 to 170 as a function of the Manual or Remote frequency programming codes.
The divided output frequency of DP2 is fed to the input of phase/frequency comparator CPF2, which also receives a 40-kHz reference frequency derived from the 1-MHz SPECTRUM by division by 25.
The DC output signal of CPF2 acts on oscillator O2 to maintain the equilibrium of the loop and satisfy the equation :

$$F = NF_0$$

in which F is the frequency of O2, N the divisor of DP2, and F_0 the reference frequency.
The DC output voltage of CPF2 is also used to coarse-tune oscillator O3 in the Increment Mixer.
The output frequency of O2, F2, which ranges from 4.84 to 6.8 MHz in 40-kHz steps, is filtered and fed directly to the increment mixer module.

NOTE : ***The phase/frequency comparator has an «alarm» circuit that is validated whenever the oscillator is not locked. The alarm signal acts on a logic circuit in the SECOND GENERATION that controls an LED on the instrument's front panel.***

PRINCIPLE OF THE 121/170 DIVIDER

Figures IV.4 to IV.6 show the principle and chronogram of this divider.

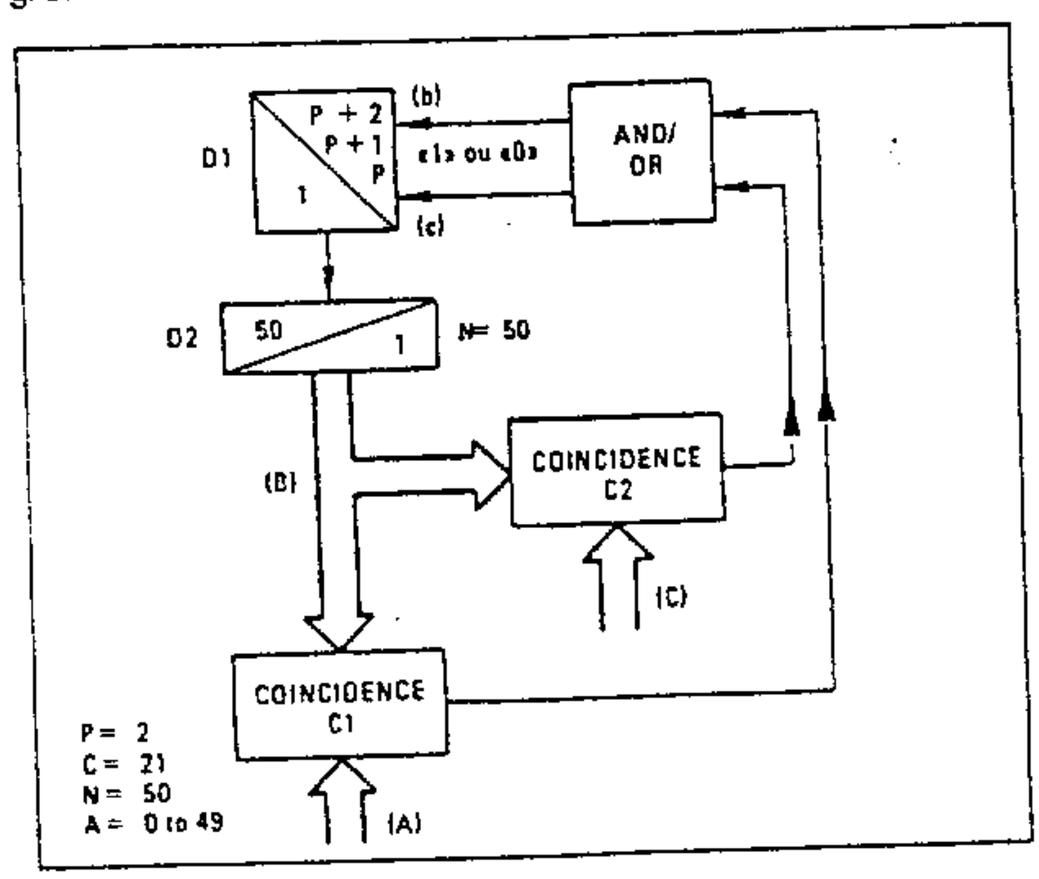

FIGURE IV.4 : Principle of the 121/170 Counter

The 121/170 programmable divider consists of a first-stage divider, D1, the divisor of which is controlled by the logic levels applied to its inputs (b) and (c), connected to a second-stage divider, D2, having a fixed divisor (N = 50).

D2 feeds a signal (B) to two comparators, one of which receives signal (C), constant and equal to 21, and the other, signal (A), ranging from 0 to 49, derived from the programming codes generated either by the front-panel decimal switches or by an external program.
These two comparators feed logic levels to a circuit that controls the divisor of divider D1 accordingly.
Two cases must be considered :
a) A is less than C.
b) A is greater than C.

First case (A less than C) : see chronogram below :

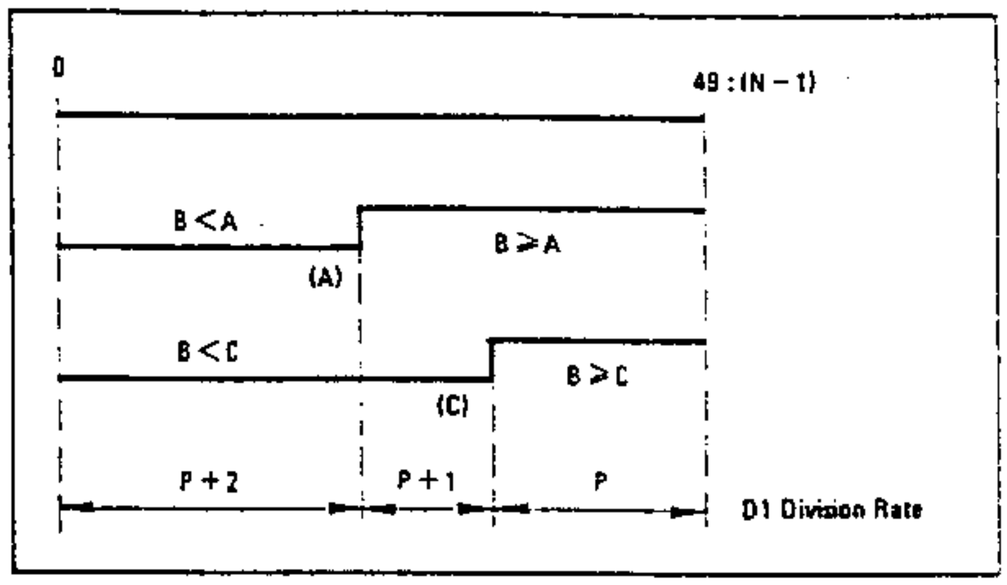

FIGURE IV.5 : Chronogram of the 121/170 counter.

The divisor of divider D1 assumes three different values in three distinc zones, the resulting divisor of the 120/170 programmable counter can be deduced from them.
- $B < A$ in which D1 divides by $P + 2$
- $A \leqslant B < C$ in which D1 divides by $P + 1$
- $B \geqslant C$ in which D1 divides by P.

This gives the following expression for the counter's divisor :

$$A\ (P + 2) + (C - A)\ (P + 1) + (N - C)\ P$$

A summary table is given below :

A < C	Signal provided by comparator C1	Signal provided by comparator C2	Signals fed to inputs (b) and (c) of D1		Divisor of D1
			(b)	(c)	
B < A	0	0	1	1	P + 2
A ≤ B < C	1	0	1	0	P + 1
B ≥ C	1	1	0	0	P

If, for example, A = 18 (< C), since the expression for the divisor of the programmable counter is A (P + 2) + (C − A) (P + 1) + (N − C) P.
The divisor is equal to (18 x 4) + (3 x 3) + (29 x 2)= 72 + 9 + 58 = 139.

Second case (A greater than C) : see chronogram below :

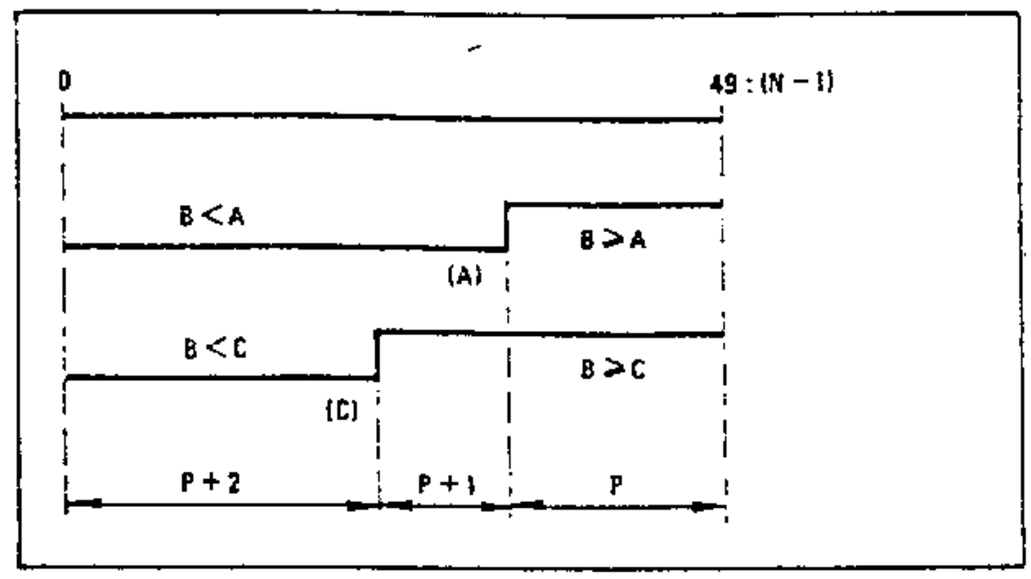

FIGURE IV.6 : Chronogram of the 121/170 counter.

In this case, the divisor of D1 is determined as follows :
- $B < C$ in which D1 divides by $P + 2$
- $C \leqslant B < A$ in which D1 divides by $P + 1$
- $B \geqslant A$ in which D1 divides by P.

In consequence, the expression of the divisor of the programmable counter is as follows :

$$C\ (P + 2) + (A - C)\ (P + 1) + (N - A)\ P$$

A summary table is given below :

A > C	Signal provided by comparator C1	Signal provided by comparator C2	Signals fed to inputs (b) and (c) of D1		Divisor of D1
			(b)	(c)	
B < C	0	0	1	1	P + 2
C < B < A	0	1	1	0	P + 1
B ≥ A	1	1	0	0	P

If, for example, A= 35 (>C), since the expression for the divisor of the programmable counter is C (P + 2) + (A − C) (P + 1) + (N − A) P, the divisor is equal to (21 x 4) + (14 x 3) + (15 x 2)= 84 + 42 + 30= 156.

When A is equal to C, the expression for the divisor becomes :

$$(P + 2)\ A + (N - A)\ P \text{ or } (P + 2)\ C + (N - C)\ P$$

If, for example, A = 21 (=C), (P + 2) 21 + (29) 2 = (4 x 21) + (29 x 2) = 142.

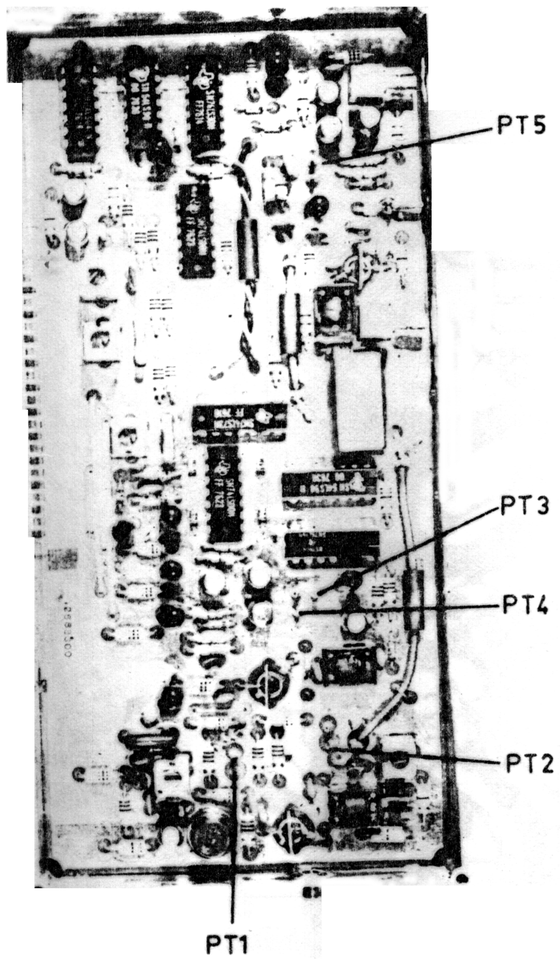

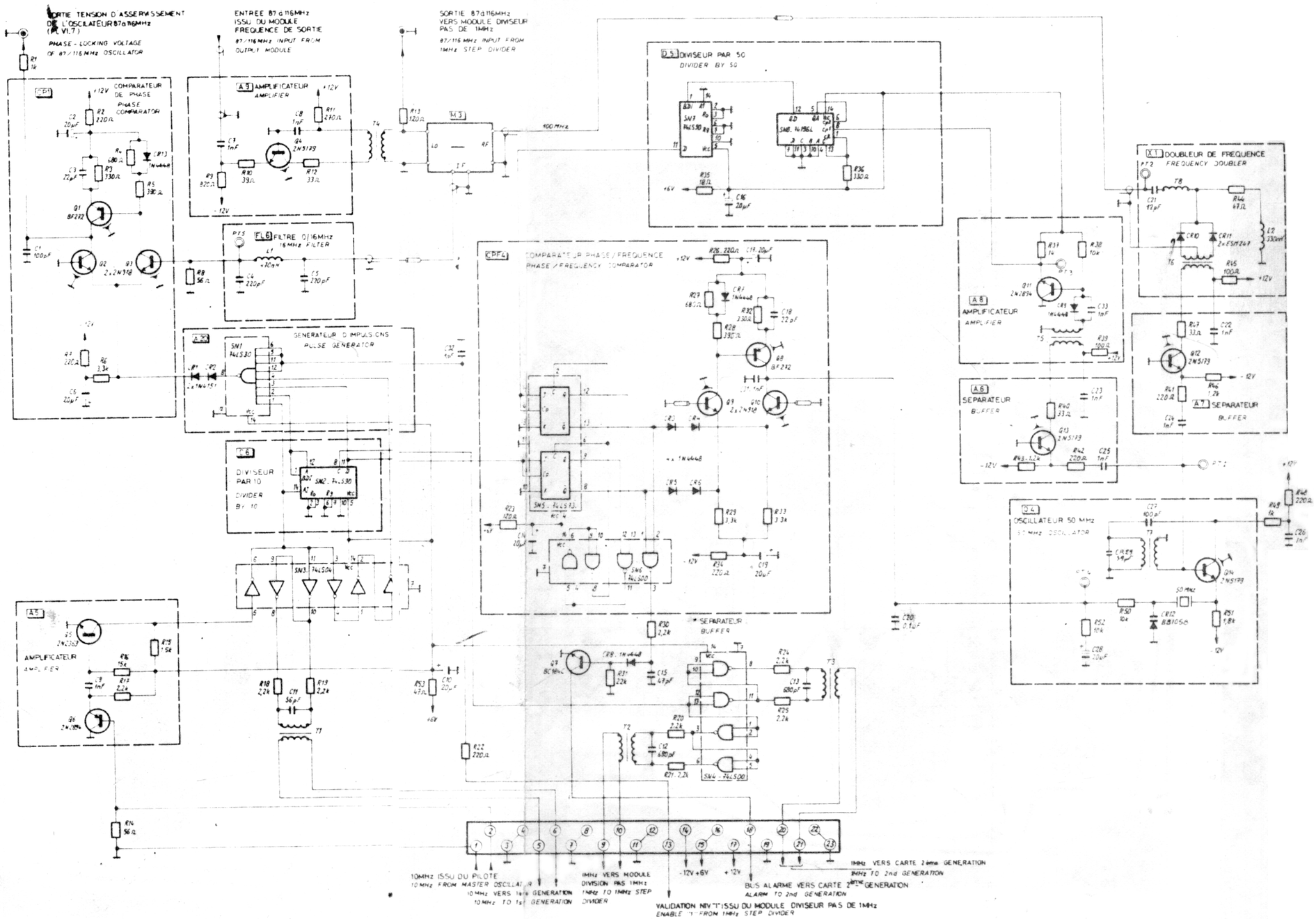

CIRCUIT DIAGRAM N° 976883

FAULT TREE

1 MHz SPECTRUM MODULE

- Check for presence of 10 MHz signal between pins 1 and 2 of connector : 1 V ppk.

NO → • Refer to fault tree for pilot.

YES ↓

- Check for presence of 1 MHz signal between pins 9 and 10 of connector : 800 mV ppk.

NO → • Divider D6 or amplifier A5 faulty (refer to circuit diagram)

YES ↓

- Check for DC voltage between + 1 and + 10.8 V at PT4 when warying pilot frequency potentiometer between 0 and 10 settings.

NO → • Check oscillator O4 (50 MHz) : A6 - A8 - D5 - CPF4.

YES ↓

- Check for presence of 100 MHz signal at PT2 : − 4 dBm

NO → • Check A7 and X1

YES ↓

- Select frequency of 90 MHz and check for presence of 87 MHz frequency at 87/116 MHz coaxial socket on top of 1 MHz spectrum module (see diagram) :
- Check for presence of logic «1» (≃ + 4 V) at pin 13 of connector.
- Check for presence of DC voltage between + 3 V and + 9 V at coaxial «control voltage» socket on bottom of module, accordint to 1 MHz step coded.

NO → • Check CP1 - FL6 - M3 and A9 (refer to circuit diagram) If not faulty, check 10 MHz step module and output module.

6 - 1 MHz SPECTRUM MODULE

Documentation

General description and operating principles.
Fault tree.
Circuit diagram N° 976883.
Wiring and component layout diagram N° 932127 2/2.

Instrument and equipment required

Spectrum analyser.
Frequency meter.
Oscilloscope.
Card extender.

Carry out the checks indicated on the fault tree referring to the circuit diagram and wiring and component layout diagrams where necessary.

PRINCIPLE OF THE 1-MHz SPECTRUM MODULE

Figure IV.8 shows the principle of the 1-MHz SPECTRUM MODULE and Plate N° 976883 is its circuit diagram.

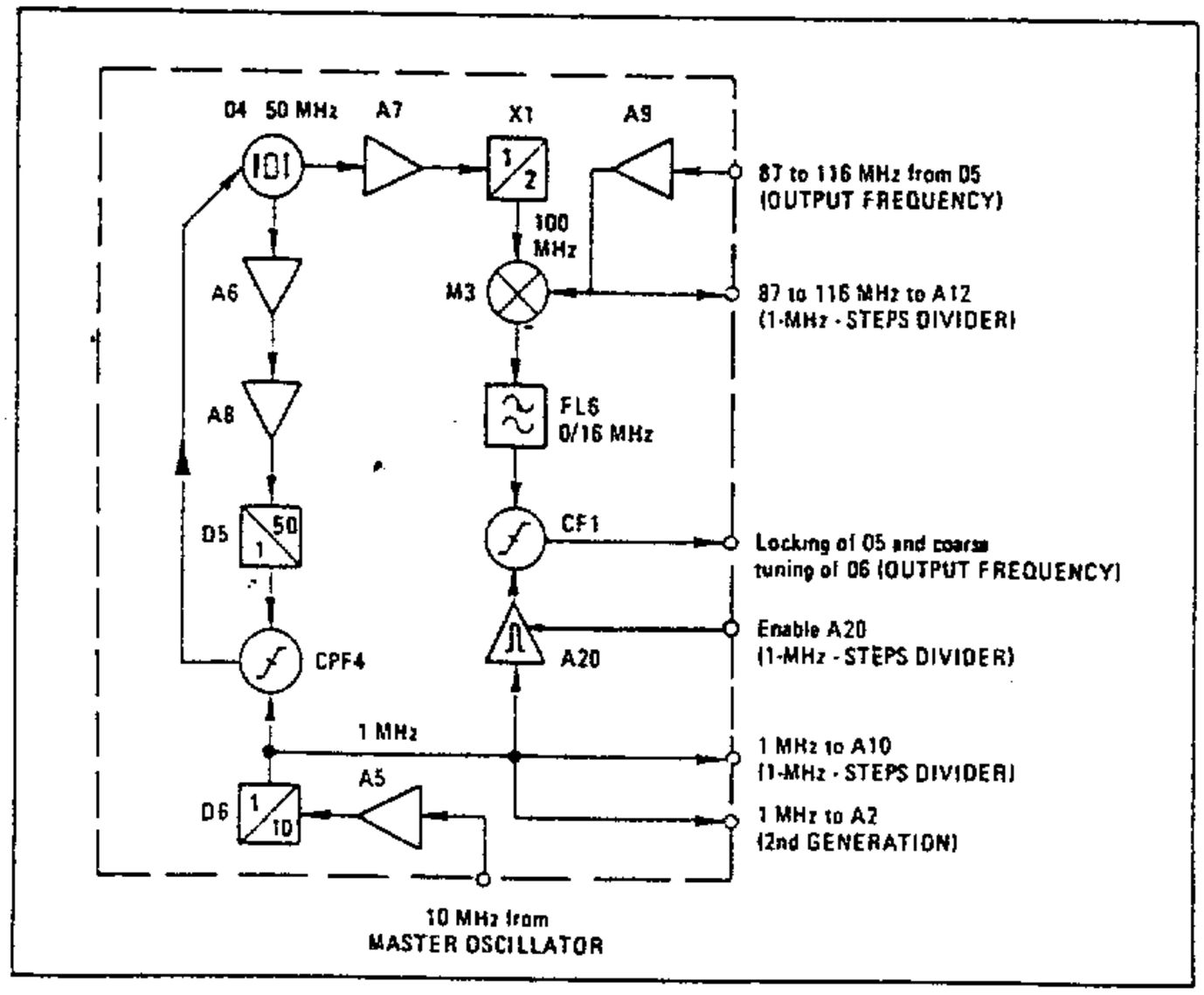

FIGURE IV.8 :
Principle of the 1-MHz Spectrum.

The 1-MHz SPECTRUM MODULE serves to improve the noise level of the output signal. It consists of a 50-MHz quartz-crystal oscillator, 04, a fixed counter, and a phase/frequency counter, CPF4, forming a fixed loop.
The comparator receives a 1-MHz reference derived from the 10-MHz frequency of the master oscillator by division by 10 (D6).
The 50-MHz frequency is amplified and fed to doubler circuit X1, which feeds a frequency of 100 MHz to the «RF» input of mixer M3, which also receives the frequency ranging from 87 to 116 MHz generated by oscillator 05 (in the Output Frequency module).
The subtractive beat, ranging from 0 to 16 MHz, is filtered and fed to phase comparator CP1, which also receives the 1-MHz frequency from comb generator A2. A20 is validated by a logic circuit, L, in the 1-MHz STEPS DIVIDER MODULE.
The DC output signal from CP1 controls oscillator 05 and coarse-tunes oscillator 06 ; both of these oscillators are part of the OUTPUT FREQUENCY MODULE.

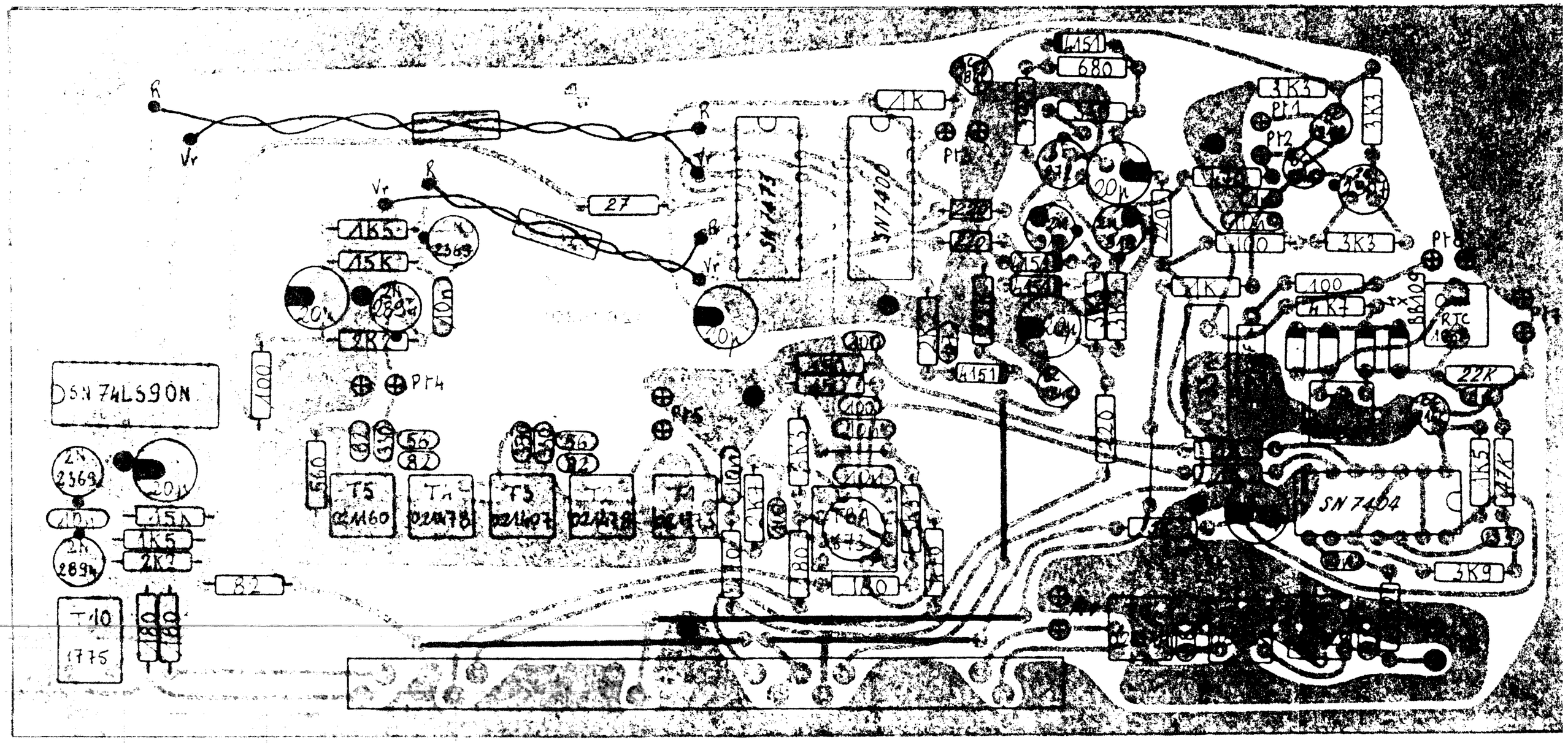

WIRING AND COMPONENT LAYOUT
DIAGRAM N° 932131 2/2

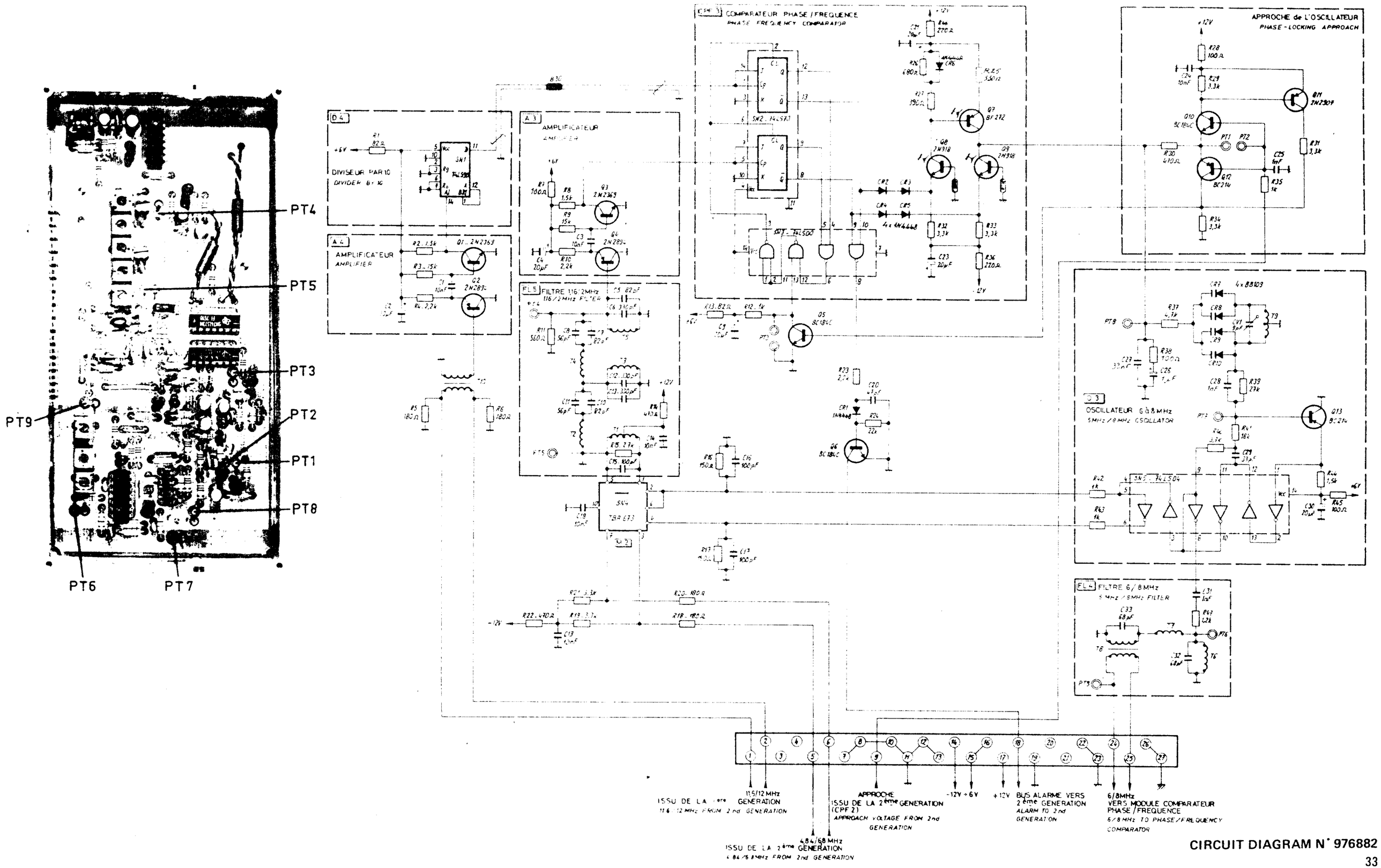

CIRCUIT DIAGRAM N° 976882

FAULT TREE

INCREMENT MIXER MODULE

- Disconnect following subsystems :
  - 1 MHz divider
  - phase-frequency comparator
  - output module

↓

- Set switches selecting step less than 100 kHz to «0»
- Check for presence of 1.16 MHz signal between pins 1 and 14 of SN2 : 3.8 V ppk.

NO → • Divider D4 or amplifier A4 faulty (refer to circuit diagram)

↓ YES

- Check tuning voltage at output of second generation card (pin 9 of connector) : between + 2 V and + 9 V for all 10^4 and 10^5 Hz steps.

NO → • Refer to fault tree for second generation card.

↓ YES

- Check oscillator 03 and control circuit (see circuit diagram)
- Check that absolute value of voltage between test points PT1 and PT2 is ⩽ 300 mV.

NO → • One of following circuits faulty :
  - filter FL5
  - mixer M2
  - amplifier A3
  - oscillator 03.

5 - INCREMENT MIXER MODULE

Documentation

General description and operating principles.
Fault tree.
Circuit diagram N°976882.
Wiring and component layout diagram N°932131 2/2.

Instrument and equipment required

Oscilloscope.
Module extender.
Frequency meter.

Carry out the checks indicated on the fault tree referring to the circuit diagram and wiring and component layout diagrams where necessary.

PRINCIPLE OF THE INCREMENT MIXER

The Mixer module combines the increments from the two-GENERATIONS and controls oscillator 03, which provides a frequency ranging from 6 to 7.999,98 MHz.
Figure IV.7 shows the principle of the INCREMENT MIXER and Plate N°976882 is its circuit diagram.

The DC output voltage of CPF3 controls oscillator 03 so as to maintain the loop is equilibrium and satisfy the equation F = F1 + F2, in which F represents the frequency of oscillator and F1 and F2 the output frequencies of the FIRST AND SECOND GENERATIONS.

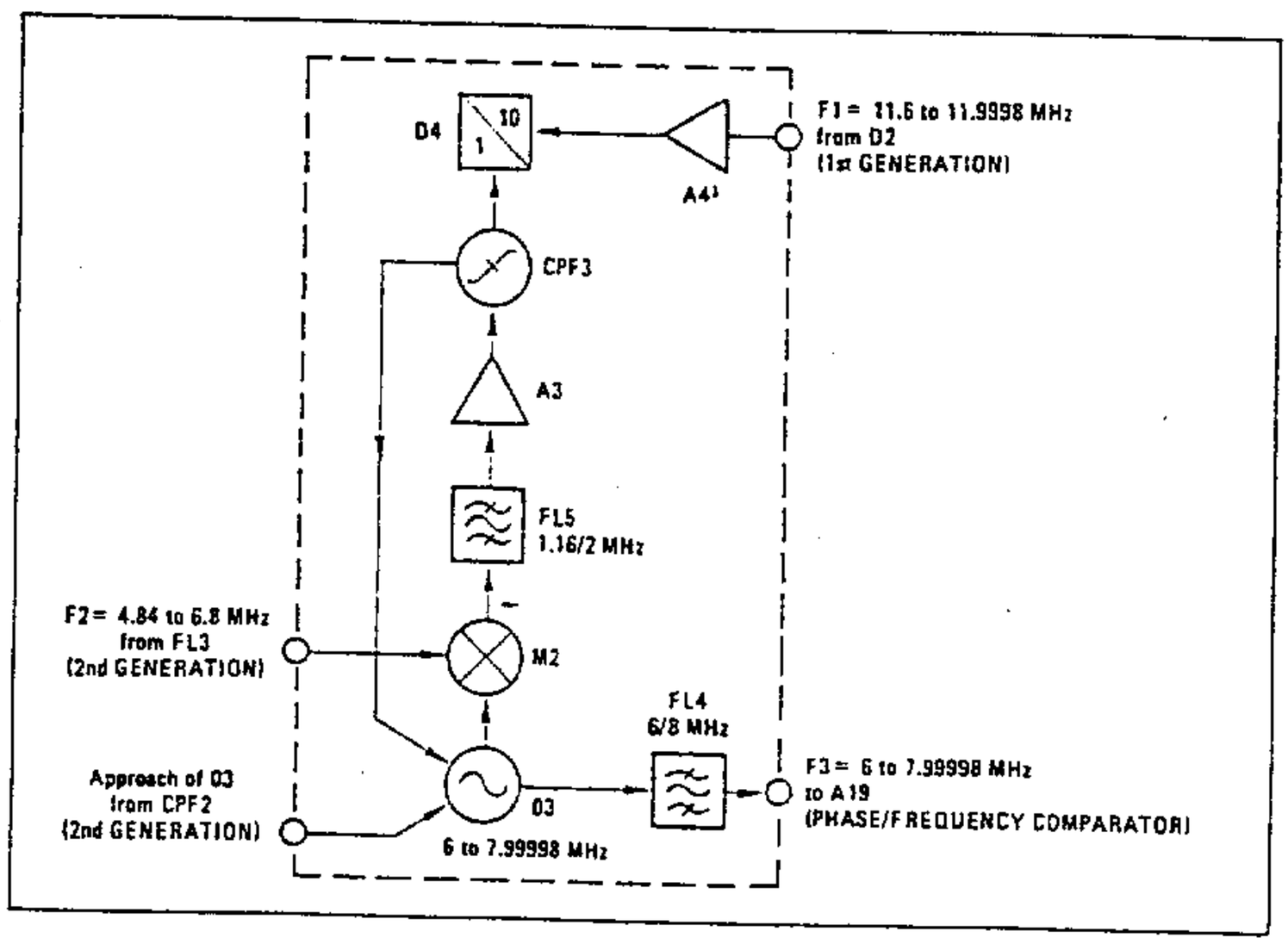

FIGURE IV.7 :
Principle of the Increment Mixer.

After coarse-tuning by phase/frequency comparator CPF2 (SECOND GENERATION board), the signal provided by oscillator 03 is fed to the linear input of mixer M2, which receives the 4.84/6.8-MHz signal on its switching input.
The subtractive beat is filtered, amplified, and fed to phase/frequency comparator CPF3, which also receives a frequency ranging from 1.16 to 1.199,98 MHz derived from F1 (11.6 to 11.999,8 MHz - FIRST GENERATION) by division by 10.

NOTE : *The phase/frequency comparator has an «alarm» circuit that is validated when the oscillator is not locked. The alarm signal acts on a logic circuit in the SECOND GENERATION that controls an LED on the instrument's front panel.*

The output signal of the Mixer module, which comes directly from oscillator 03 and includes all the increments of the 10^1 to 10^5 Hz steps, is divided by 2 and fed to CPF6 of the PHASE/FREQUENCY COMPARATOR MODULE.

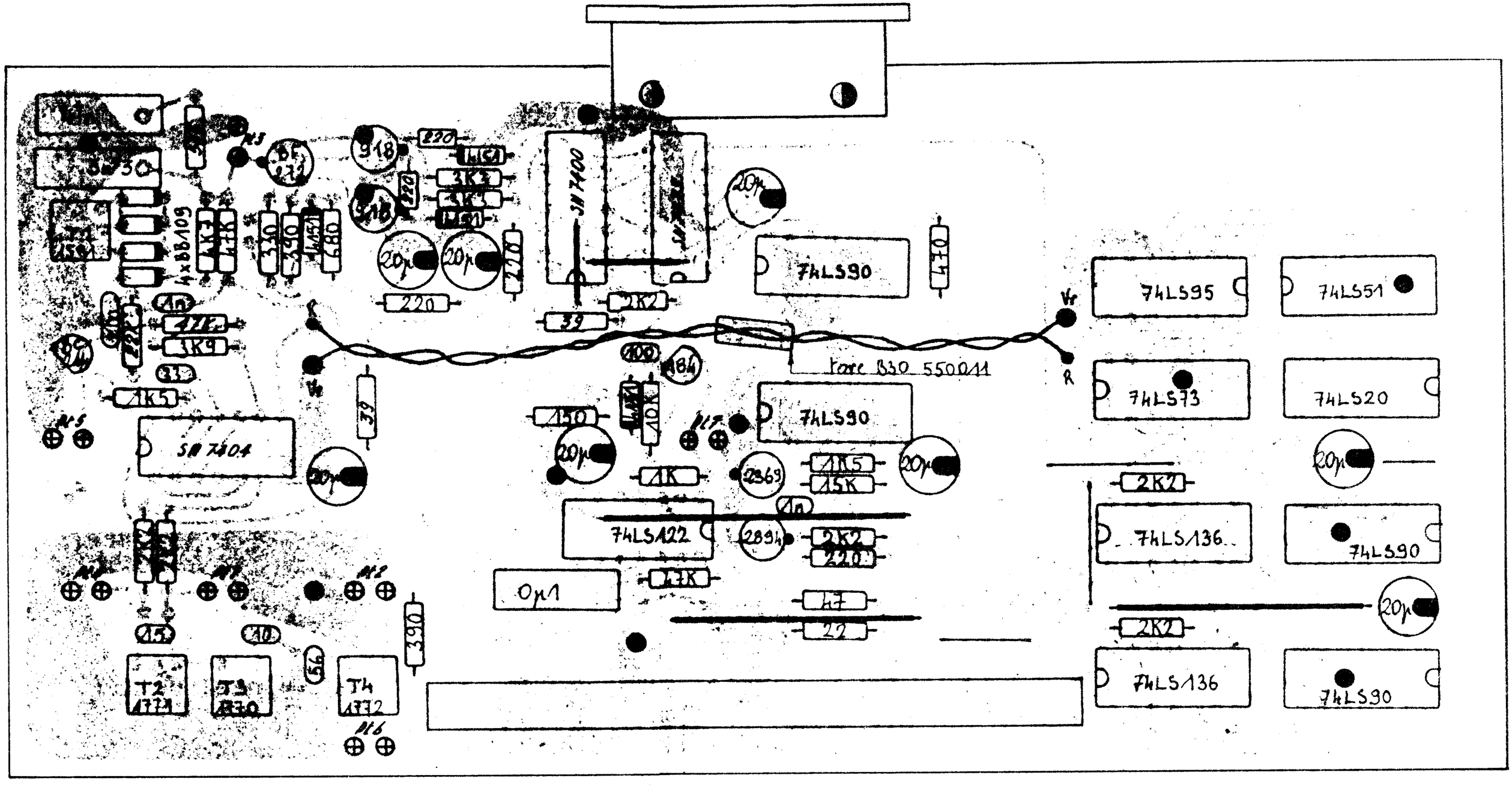

WIRING AND COMPONENT LAYOUT
DIAGRAM N° 932180 2/2

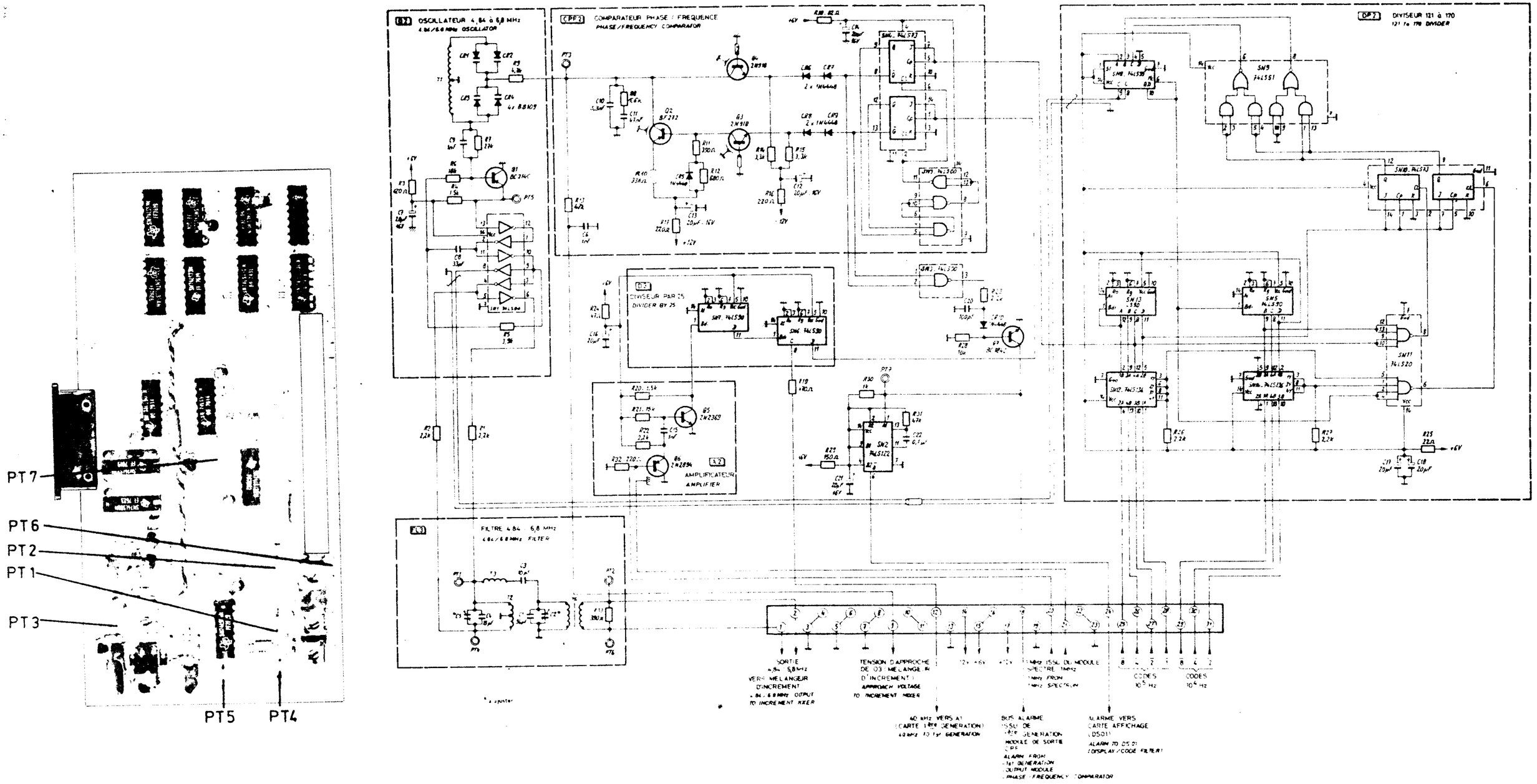

CIRCUIT DIAGRAM N° 976881

FAULT TREE

SECOND GENERATION CARD

- Disconnect the following subsystems :
  - first generation card
  - increment mixer
  - phase/frequency comparator
  - output module.

↓

- Check for presence of 1 MHz signal between pins 20 and 21 of connector : 800 mV ppk ± 100 mV.

NO → • Refer to fault tree for 1 MHz spectrum module.

YES ↓

- Check for presence of 40 kHz reference frequency at output of circuit SN6 (pins 8 and 11) : 4 V ppk.

NO → • Divider D3 or amplifier A2 faulty (refer to circuit diagram)

YES ↓

- Check oscillator and control circuit from PT3 : control voltage is between + 2 V and + 9 V for all codes 10^4 and 10^5 Hz (except. 1.10^4 Hz step).

NO → • Oscillator or programmable divider or comparator faulty (02 - DP2 - CPF2) : refer to circuit diagram.

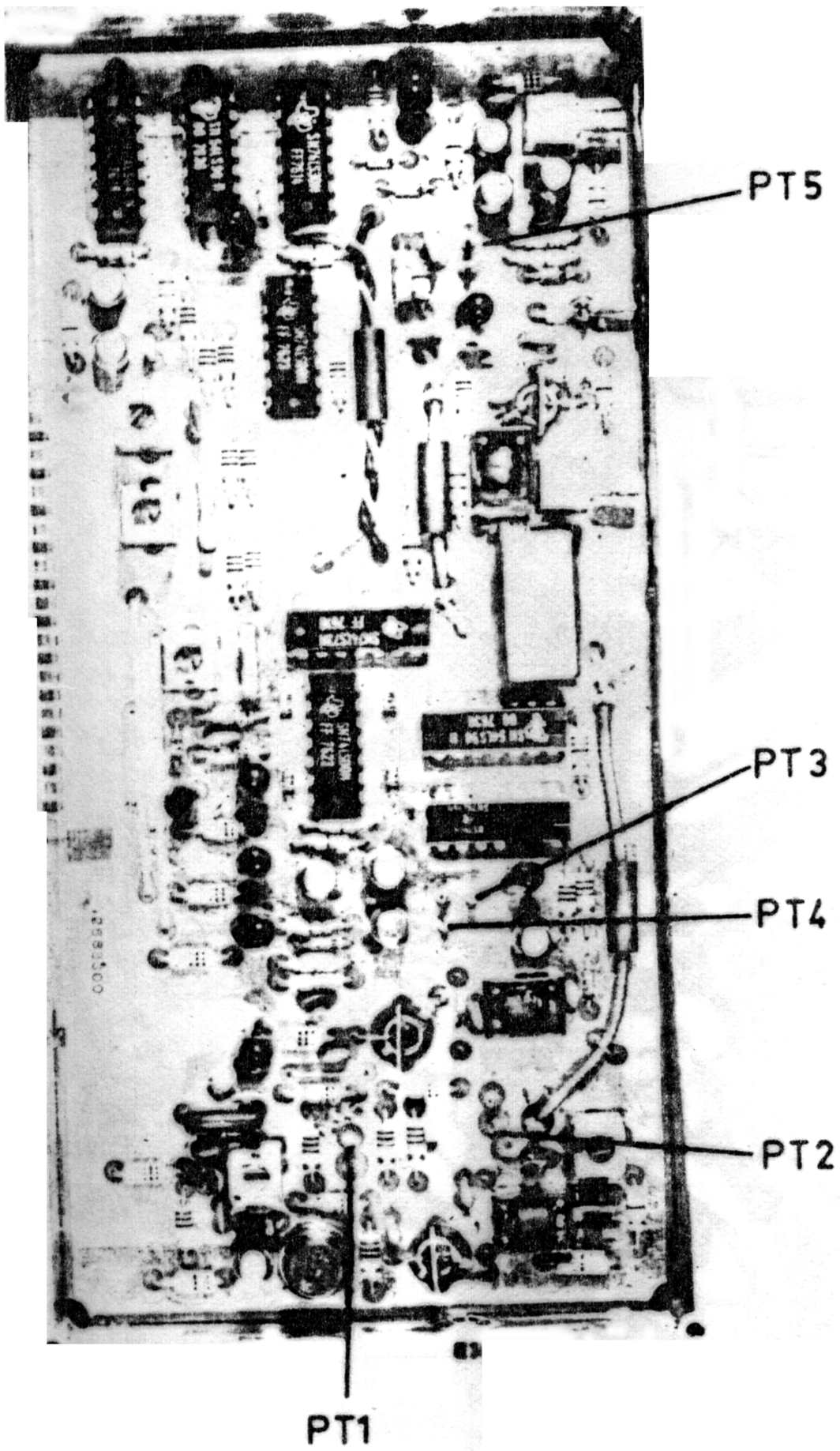
PT5
PT3
PT4
PT2
PT1

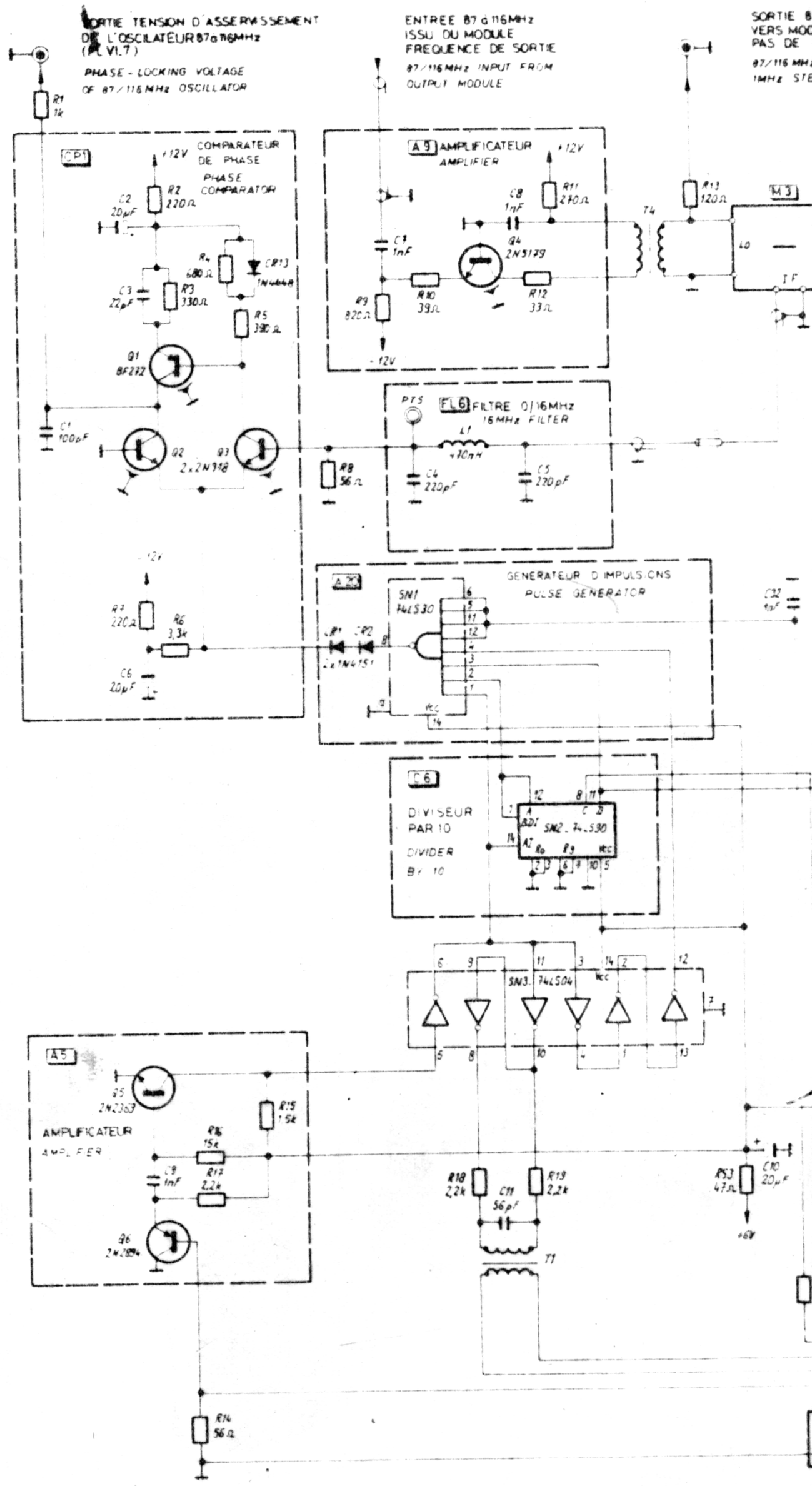
SORTIE TENSION D'ASSERVISSEMENT DE L'OSCILLATEUR 87 à 116MHz (PL VI.7)
PHASE - LOCKING VOLTAGE OF 87/116 MHz OSCILLATOR
ENTREE 87 à 116MHz ISSU DU MODULE FREQUENCE DE SORTIE
87/116 MHz INPUT FROM OUTPUT MODULE
CP1
COMPARATEUR DE PHASE
PHASE COMPARATOR
A5 AMPLIFICATEUR
AMPLIFIER
FL6 FILTRE 0/16MHz
16MHz FILTER
A20
GENERATEUR D'IMPULSIONS
PULSE GENERATOR
C6
DIVISEUR PAR 10
DIVIDER BY 10
SN1 74LS30
SN2 74LS90
SN3 74LS04
AMPLIFICATEUR
AMPLIFIER
10MHz ISSU DU
10 MHz FROM MA

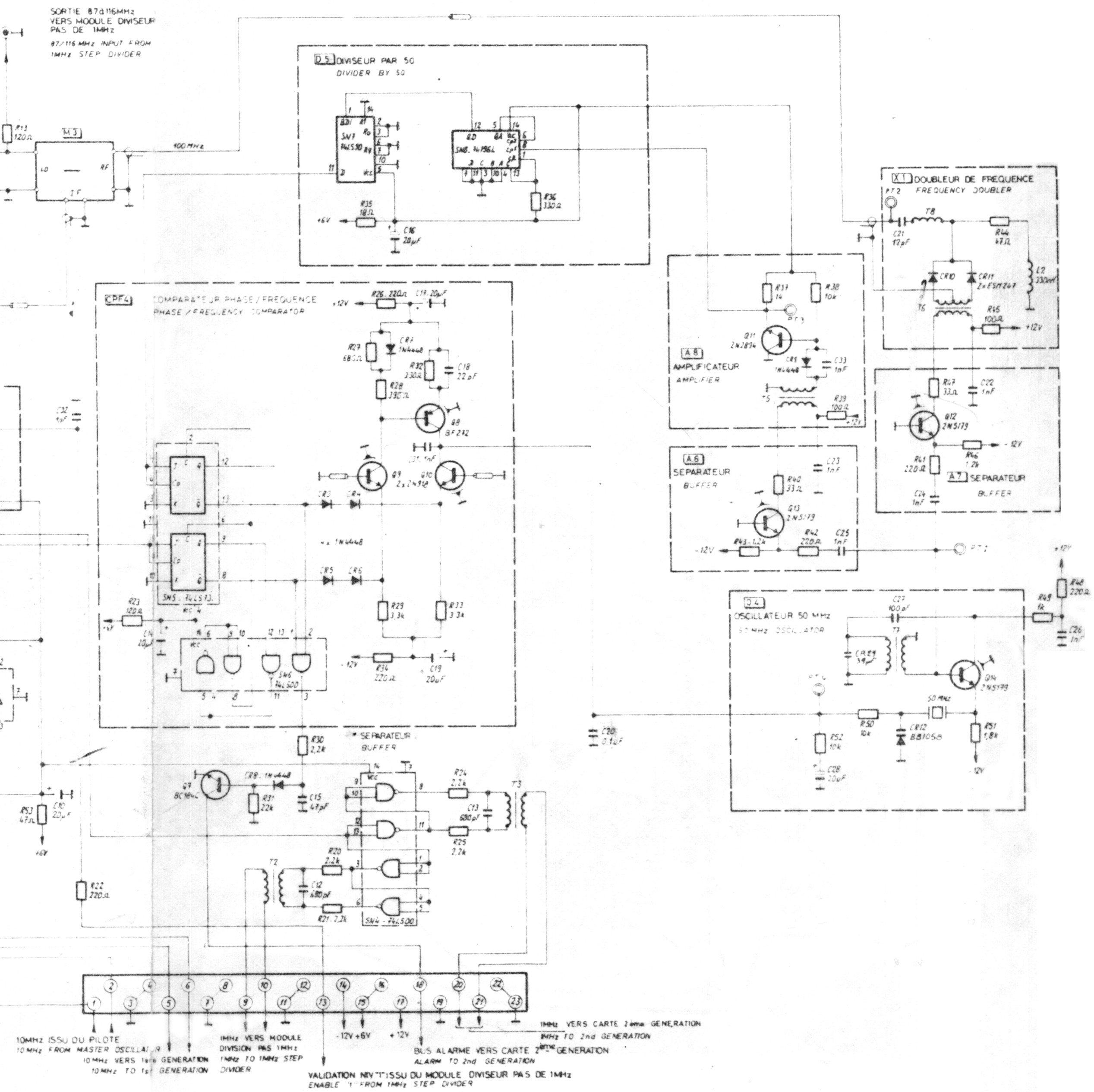

CIRCUIT DIAGRAM N° 976883

7 - 1 MHz DIVIDER/LOCK-ON MODULE

Documentation

General description and operating principles.

Fault tree.

Circuit diagram N°976885.

Wiring and component layout diagram N°932135 2/2.

Instrument and equipment required

Spectrum analyser.

Frequency meter.

Oscilloscope.

Carry out the checks indicated on the fault tree referring to the circuit diagram and wiring and component layout diagrams where necessary.

PRINCIPLE OF THE 1-MHz-STEPS DIVIDER/LOCKING MODULE

The 1-MHz STEPS DIVIDER MODULE generates the increments corresponding to the 10^6 Hz and 10^7 Hz steps. These are selected either by two decimal switches or by an external program.
Figure IV.9 shows the principle of the 1-MHz STEPS DIVIDER/MASTER OSCILLATOR LOCKING MODULE and Plate N°976885 is its circuit diagram.

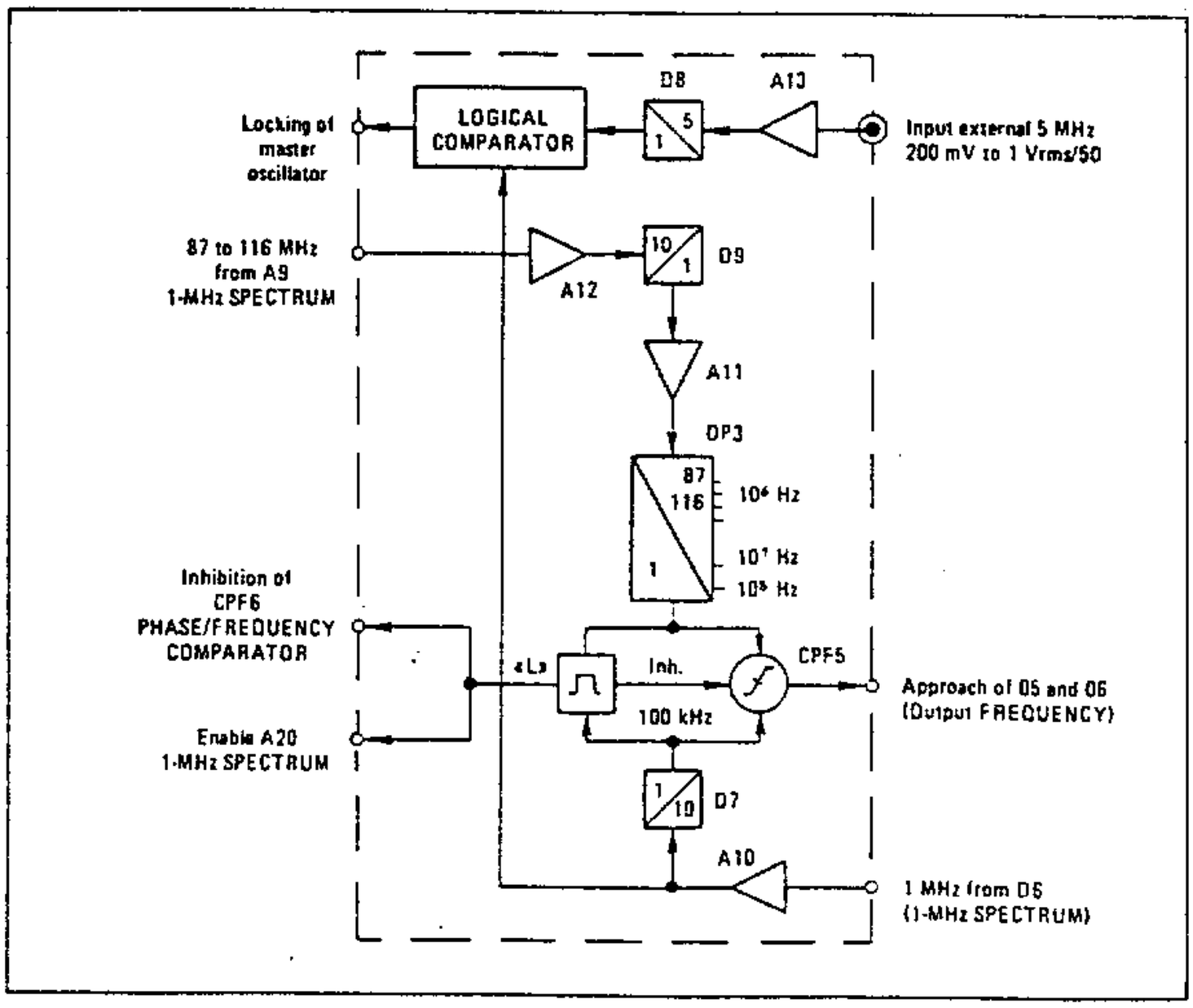

FIGURE IV.9 : Principle of the 1-MHz-Steps Divider/ Locking module.

1-MHz STEPS DIVIDER

The 1-MHz steps are generated by oscillator 05, which provides a frequency ranging from 87 to 116 MHz (Output Frequency Module). This frequency is amplified by A9 and A12 and divided by 10 in D9. The output signal of D9 is fed to programmable divider DP3, the divisor of which ranges from 87 to 116 as a function of the decimal-switch settings or external program. The signal is fed after this division to phase/frequency comparator CPF5 and to logic circuit L, both of which also receive a 100-kHz reference derived from the 10 MHz of the master oscillator by division by 100.
Unlike the phase/frequency comparators of other control loops, CPF5 is not used to maintain oscillator 05. When the output frequency of the 87/116 divider is equal to the 100-kHz reference, monostable L inhibits CPF5 and enables phase comparator CP1, which controls oscillator 05 and constitutes together with CPF5 the coarse-tuning control of the 90/119.99,99-MHz output oscillator.

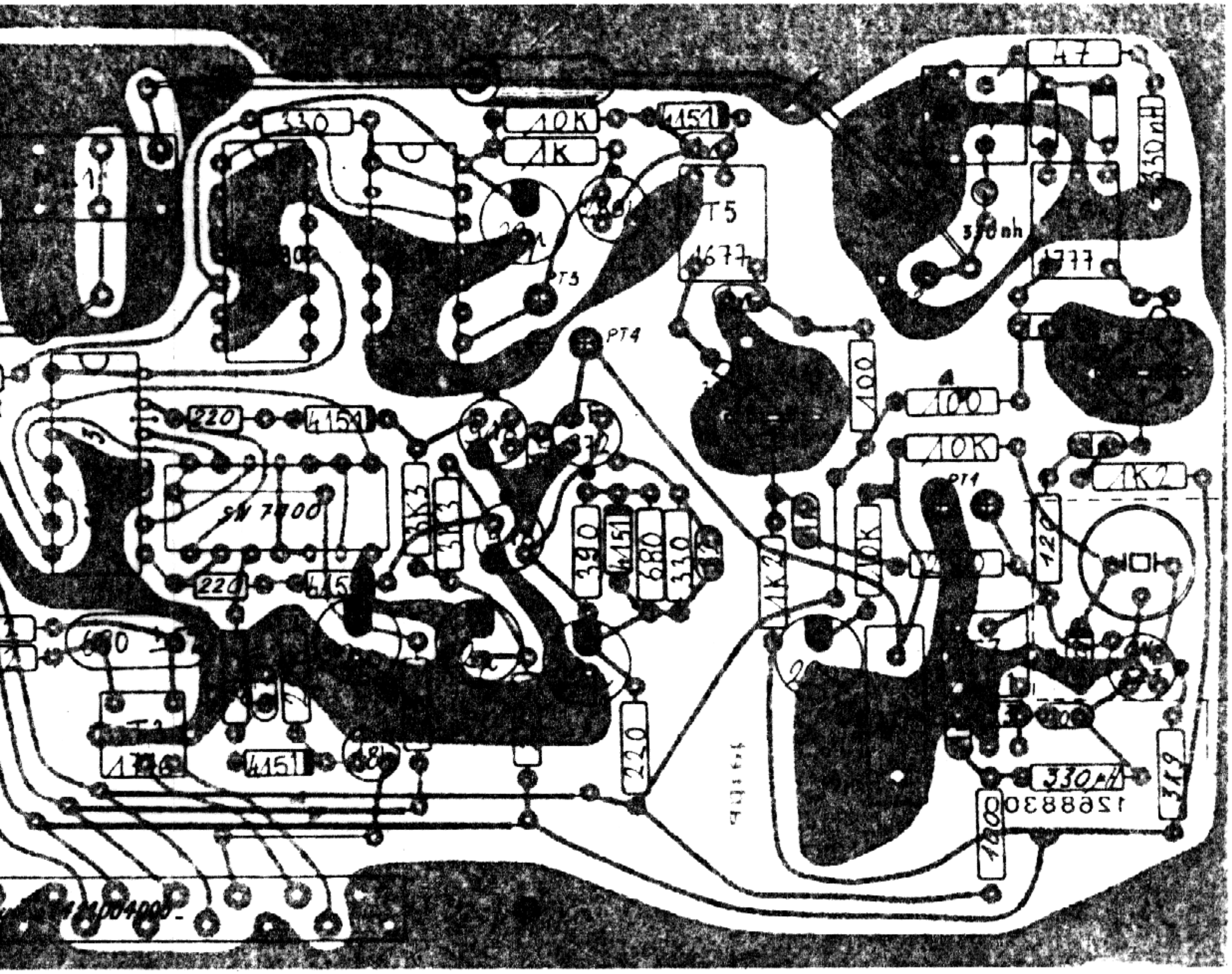
330
10K
1K
1510
T5
1677
PT4
47
350nH
350nh
1777
100
100
10K
PT4
220
4151
SN 7400
3K3
4151
390
4151
680
330
220
4151
680
220
330
10K
1K2
120
10K
330nH
3K2
1408
1268830

D1 and D2 must be type 1N4151

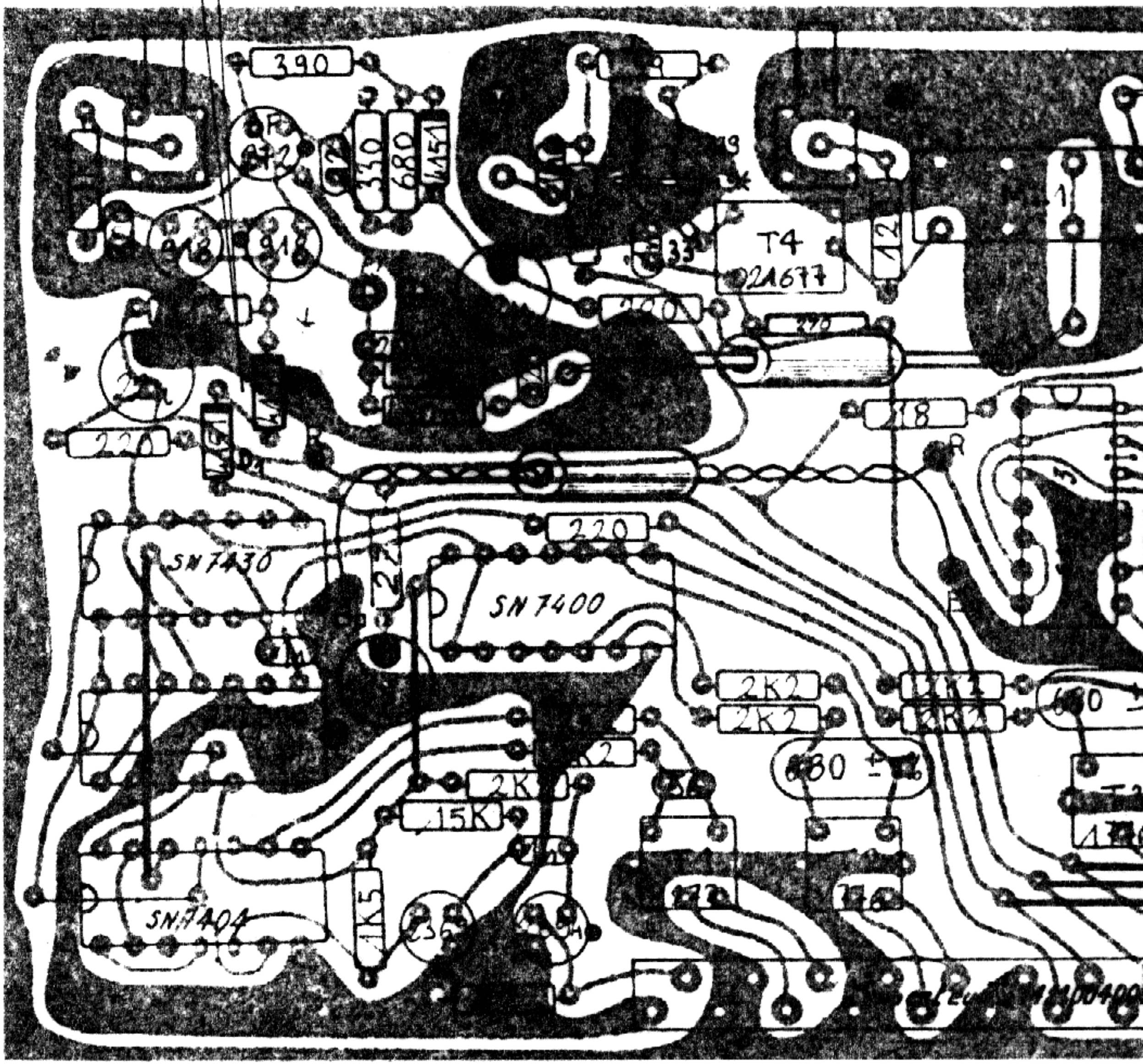

D1 and D2 must be type 1N4151

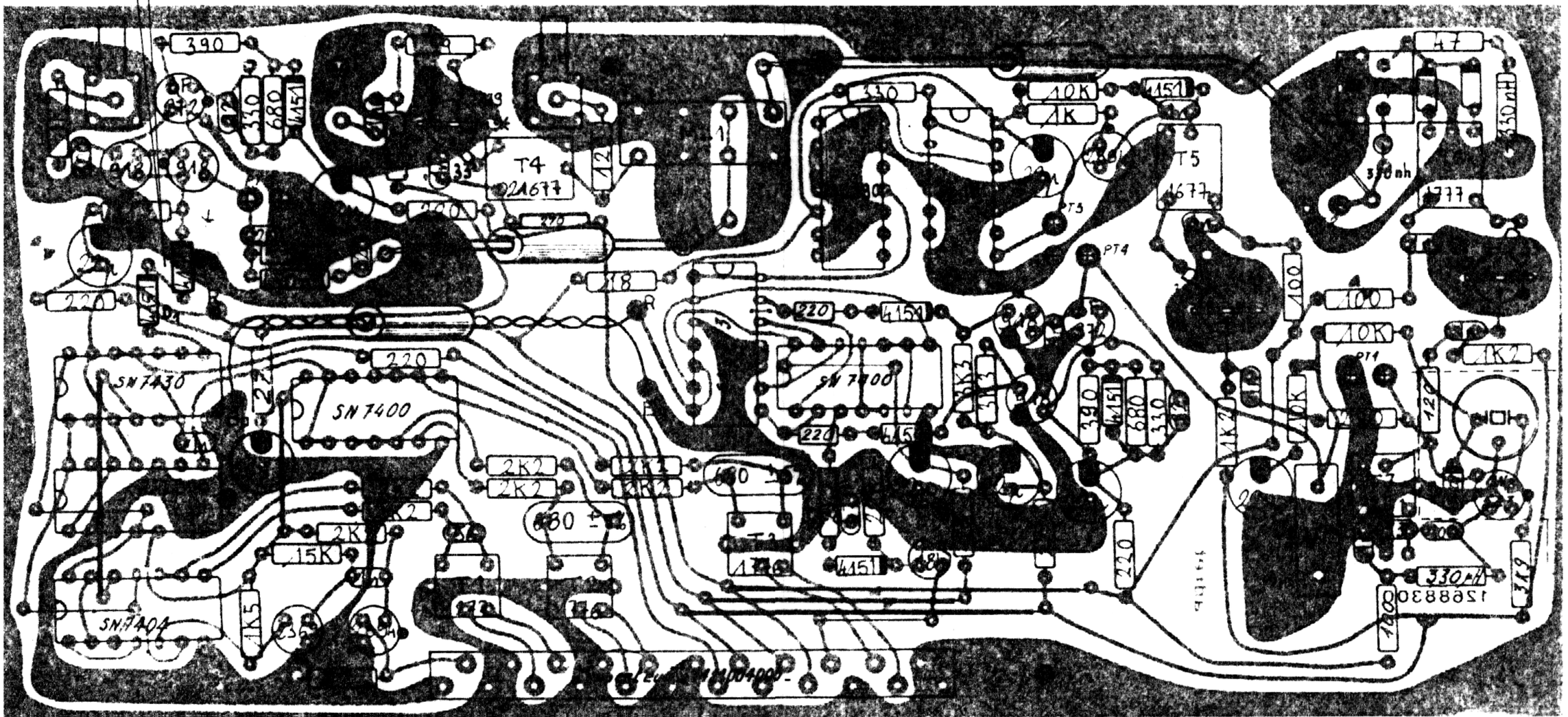

FAULT TREE

1 MHz STEP DIVIDER

- Check for presence of 87/116 MHz signal at 87/116 MHz coaxial socket on top of module (see plan view of instrument) : amplitude

NO → • Check 1 MHz spectrum module.

YES ↓

- Check for presence of 1 MHz signal at pin 2 of connector : amplitude

NO → • Check 1 MHz spectrum module.

YES ↓

- Check for presence of TTL-compatible 100 kHz signal between pins 1 and 14 of SN1 (CPF5) : amplitude 3.8 V ppk.

NO → • D7 or A10 faulty (refer to circuit diagram)

YES ↓

- Disconnect control output from 1 MHz spectrum module.
- Check 87/116 MHz tuning voltage : + 2 to + 9 V.

NO → • Check A12 - D9 - A11 - DP3 and CPF5 (refer to circuit diagram).

YES ↓

- Reconnect control output from 1 MHz spectrum module.
- Check for presence of logic «1» (+ 3 to + 4 V) at pin 5 of connector.

NO → • Check SN4 or 1 MHz spectrum module.

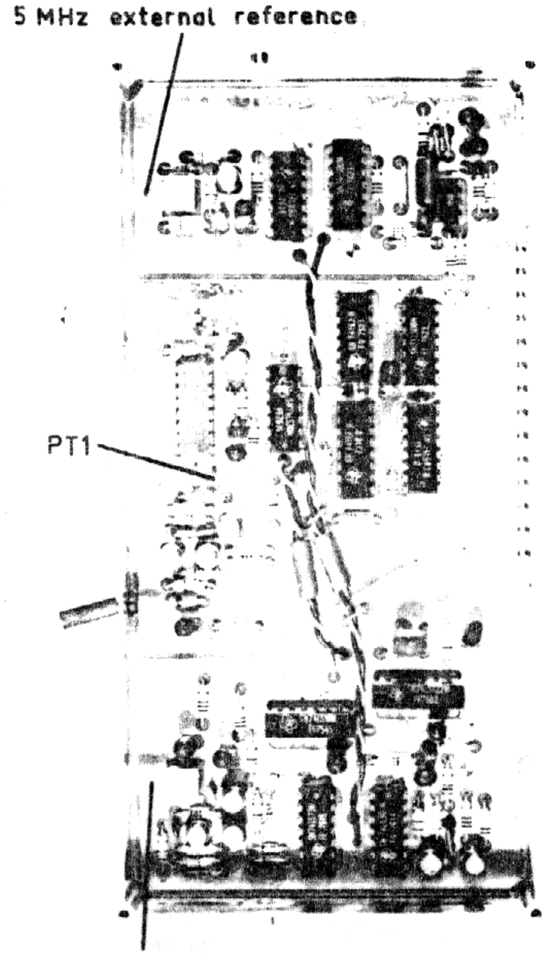

Phase locking approach to output module

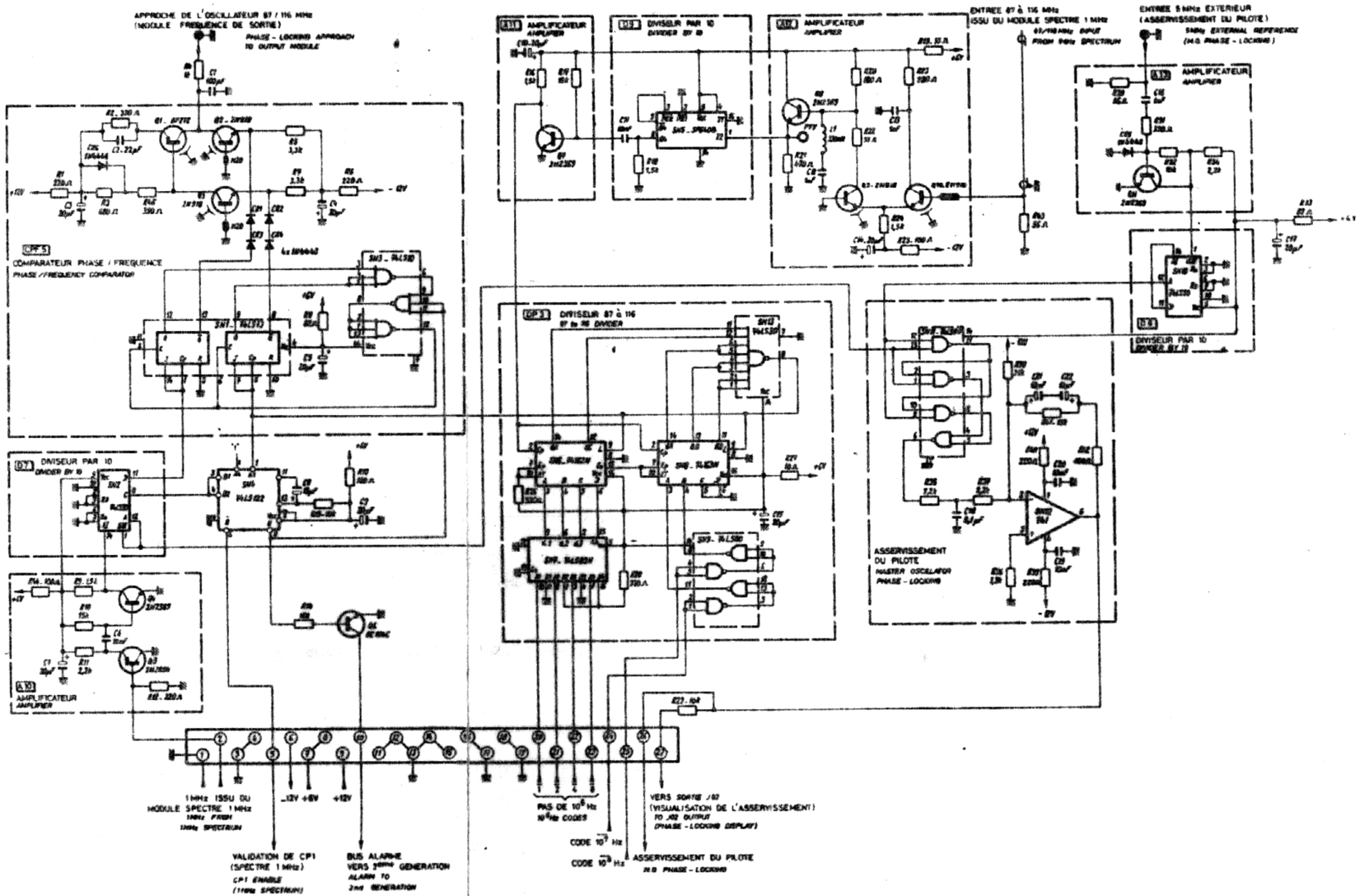

06
Phase-locking

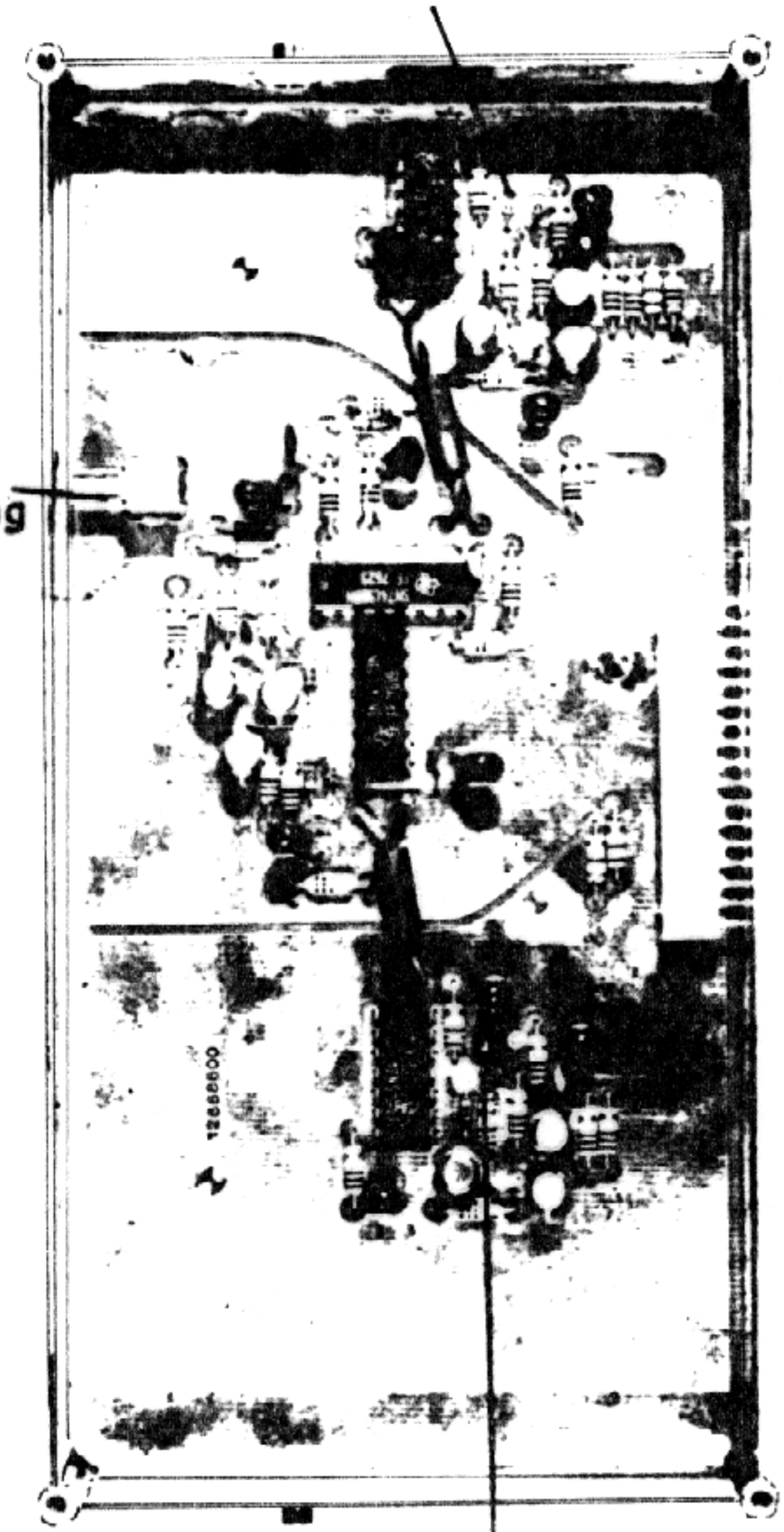

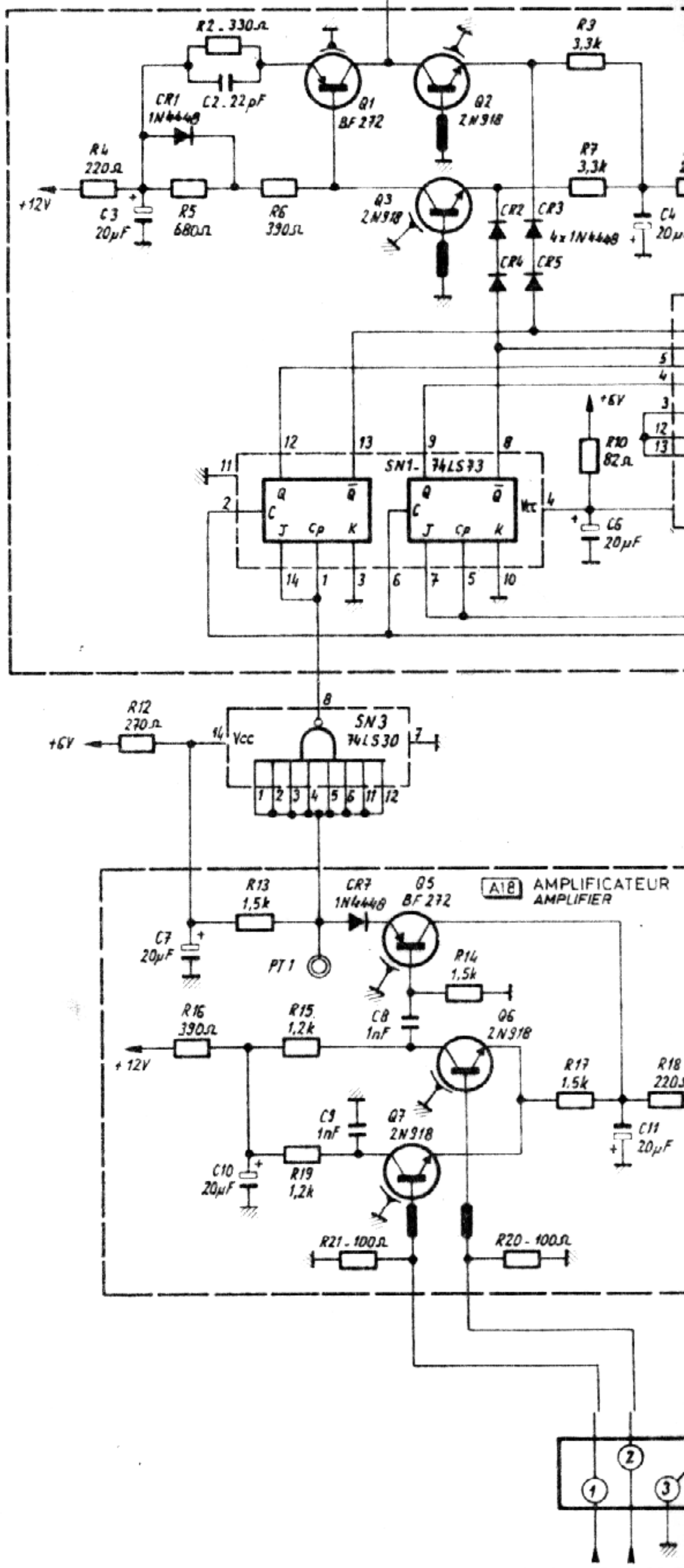

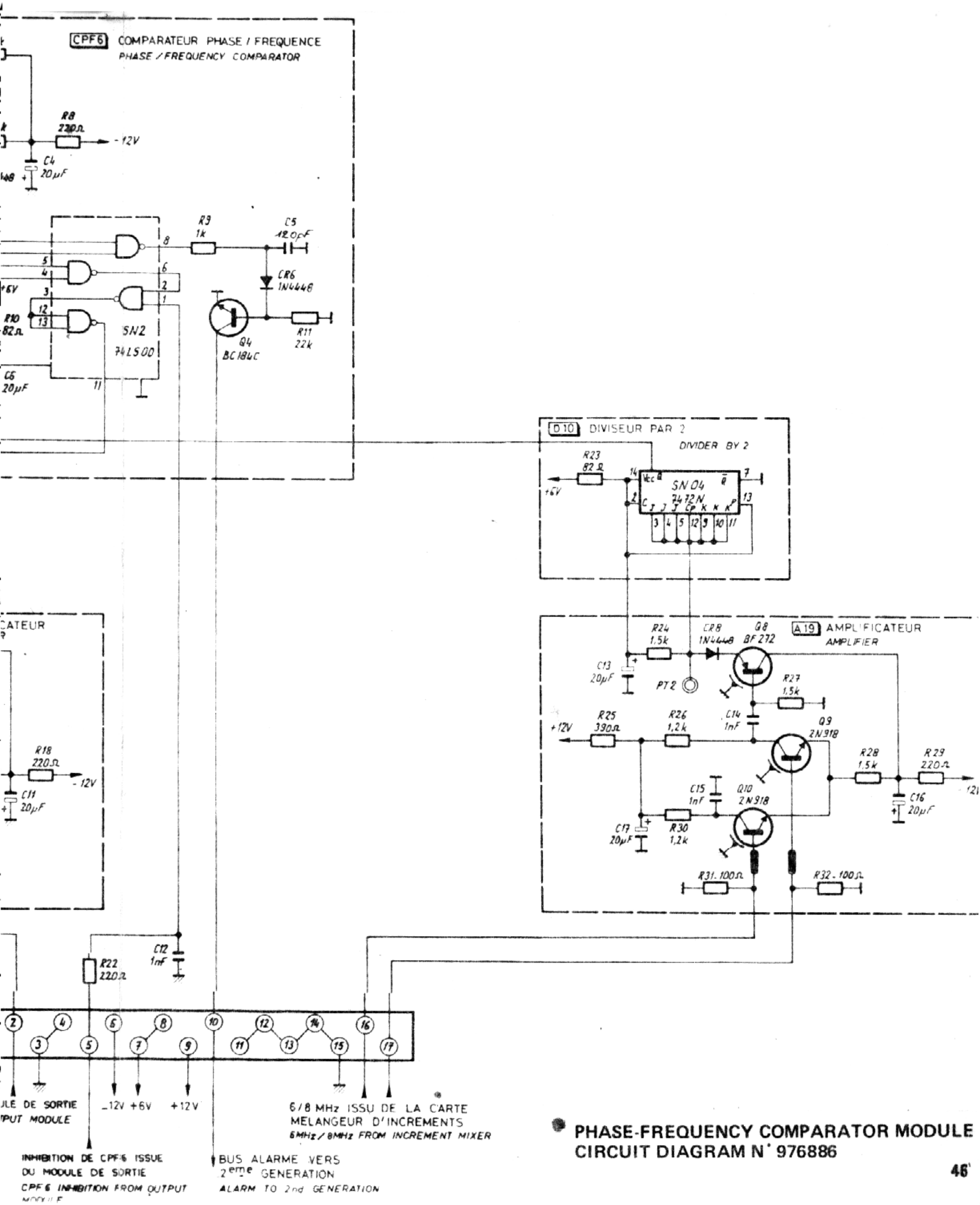

PHASE-FREQUENCY COMPARATOR MODULE
CIRCUIT DIAGRAM N° 976886

OUTPUT MODULE

- Set frequency of 90 MHz and check oscillator 05 locked on 87 MHz.
- Vary MHz code between 90 and 119 MHz and check frequency of 05 varies from 87 to 116 MHz.

NO →

- Check 05 and A14
- Check 1 MHz step divider module.
- Check 1 MHz spectrum module.

YES ↓

- Check 90 MHz output.

NO →

- No signal : check 06 - A17 - A 18
- Incorrect frequency : check A16 - M4 - FL6.
- Check module CPF.

control oscillator 06 and at the same time incorporate the 10^1 Hz to 10^5 Hz increments into the output signal.
The DC output voltage of CPF6 controls oscillator 06 so as to maintain the equilibrium of the loop at a frequency that is the sum of the frequency of oscillator 05 and the frequency from the INCREMENT MIXER MODULE (which includes the 10^1 Hz to 10^5 Hz) increments :

F (06) = 87/116 MHz + 3/3.999,99 MHz = 90/119.999,99 MHz

NOTE : ***The phase/frequency comparator has an «alarm» circuit that is validated when the oscillator is not locked. The alarm acts on a logic circuit in the SECOND GENERATION that controls an LED on the instrument's front panel.***

FAULT TREE

PHASE-FREQUENCY COMPARATOR MODULE

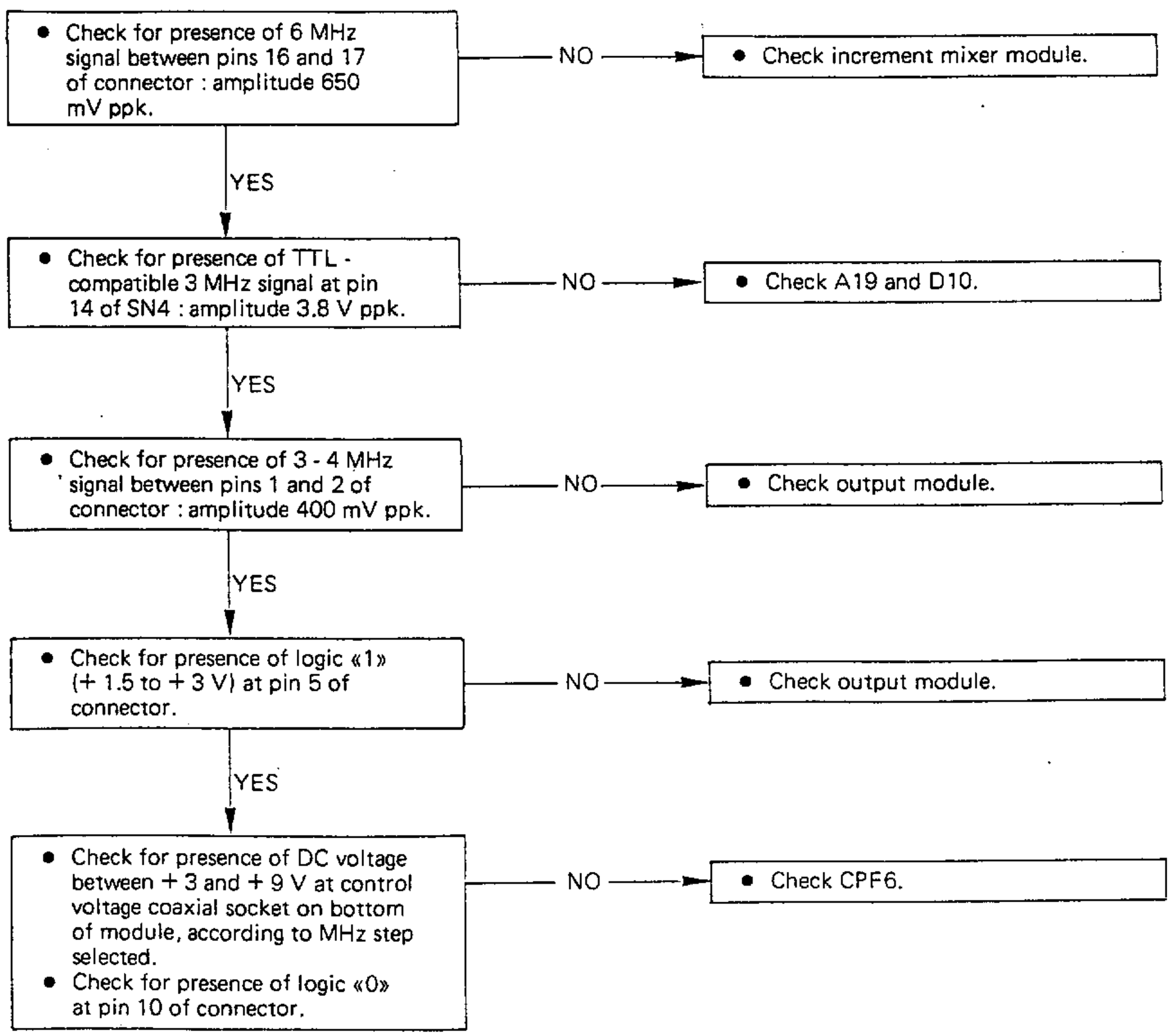

8 - PHASE-FREQUENCY COMPARATOR MODULE

Documentation

General description and operating principles.

Fault tree.

Circuit diagram N°976886 - 976887.

Wiring and component layout diagram N°932136 2/2, 932137 C 2/2, 932138 C 2/2, 932139 B.

Instruments and equipment required

Oscilloscope.

Frequency meter.

Spectrum analyser.

Carry out the checks indicated on the fault tree referring to the circuit diagram and wiring and component layout diagrams where necessary.

PRINCIPLE OF THE OUTPUT FREQUENCY AND PHASE/FREQUENCY COMPARATOR MODULES

These two modules constitute the control loop of output oscillator 06.
Figure IV.14 shows their principle of operation and Plates VI.7 and VI.8 are circuit diagrams of them.

FIGURE IV.14 : Principle of the Output Frequency and CPF modules.

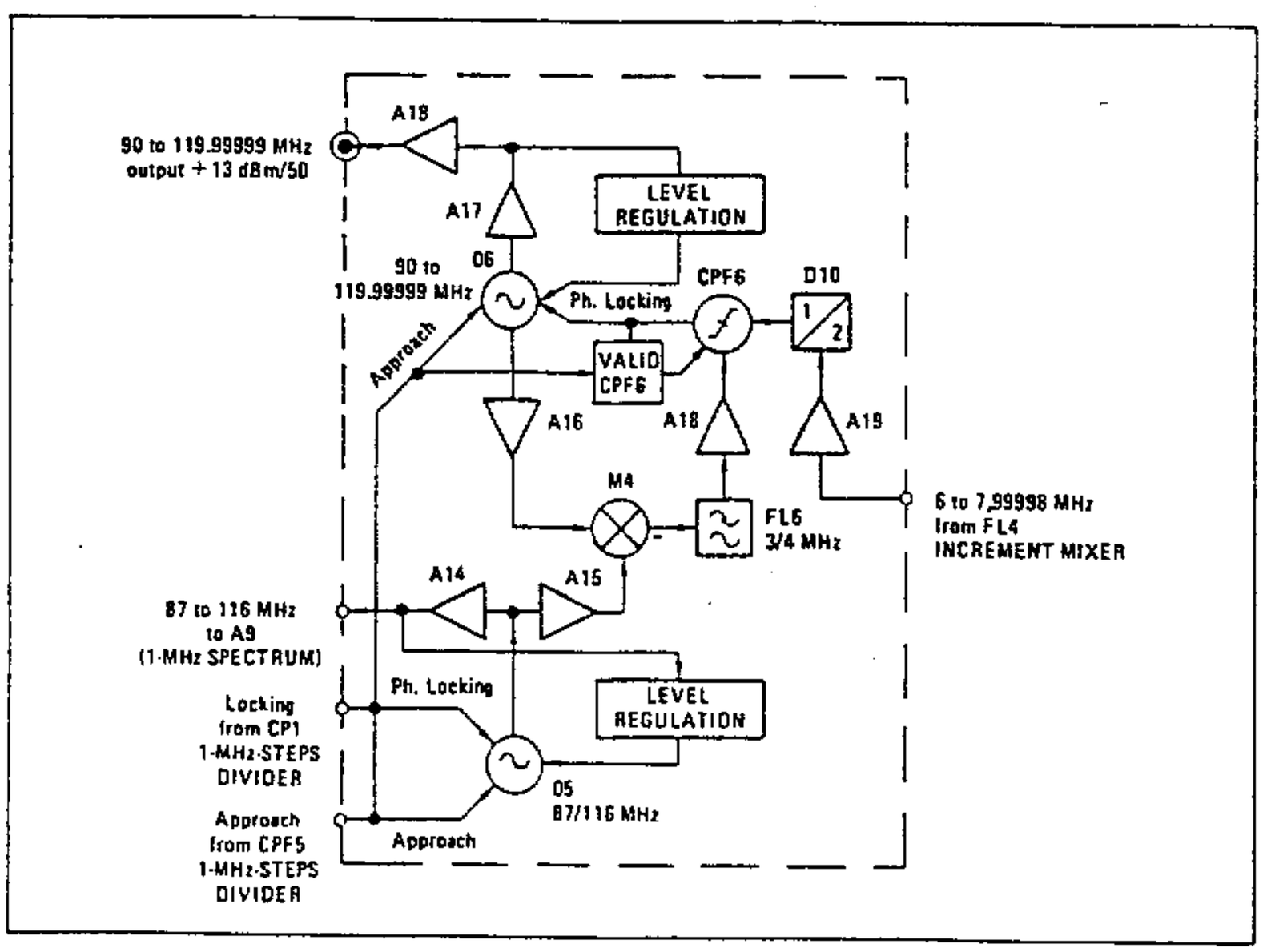

Since the control of oscillator 05 has been described earlier, in sections VI.5 and VI.6, this section is limited to control of output oscillator 06.
This oscillator, coarse-tuned by phase comparator CP1 in the 1-MHz SPECTRUM MODULE, provides a frequency that varies roughly about that of oscillator 05.
Voltage V from CP1 is applied to oscillator 06 via two complementary followers. When this voltage has attained its final value, the control voltage of 06 is V ± 0.7 V, thanks to the «follower oscillator» mounting, this limits the frequency error to a maximum of 5 to 6 MHz.
During the time required to reach the value of V ± 0.7 V, comparator CPF6 is inhibited by a signal from monostable L (1-MHz STEPS DIVIDER MODULE).
Once the value has been reached, the inhibition of CPF6 is suppressed, enabling this comparator to

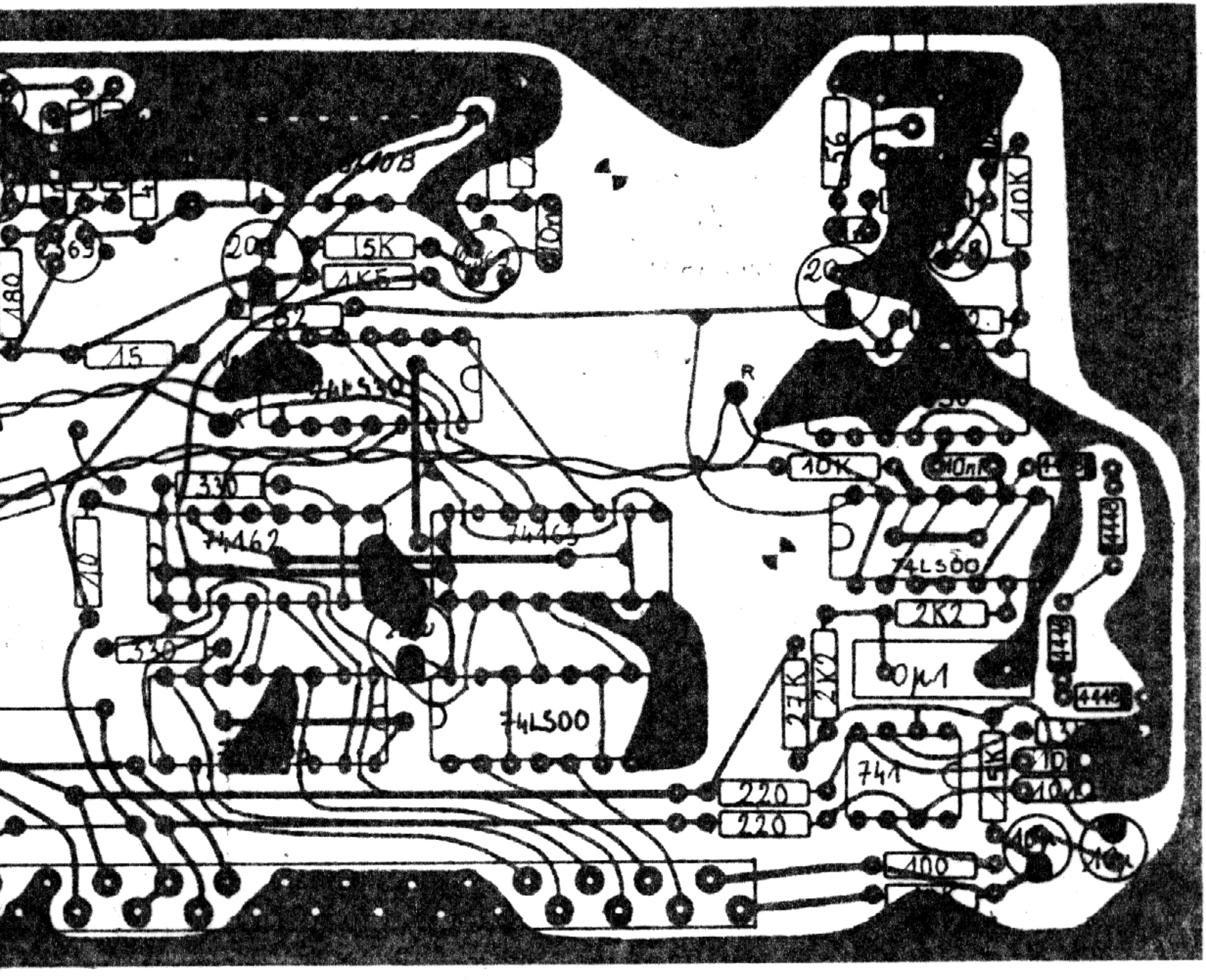
1K5
74LS00
330
74162
74LS00
2K2
0µ1
741
220
220
400
10K
10K
74LS00
2K2
27K
2K2
1K5
10
10
10µ
10µ
4448
4448
4448
4448
15
180
69
20
20
56
R

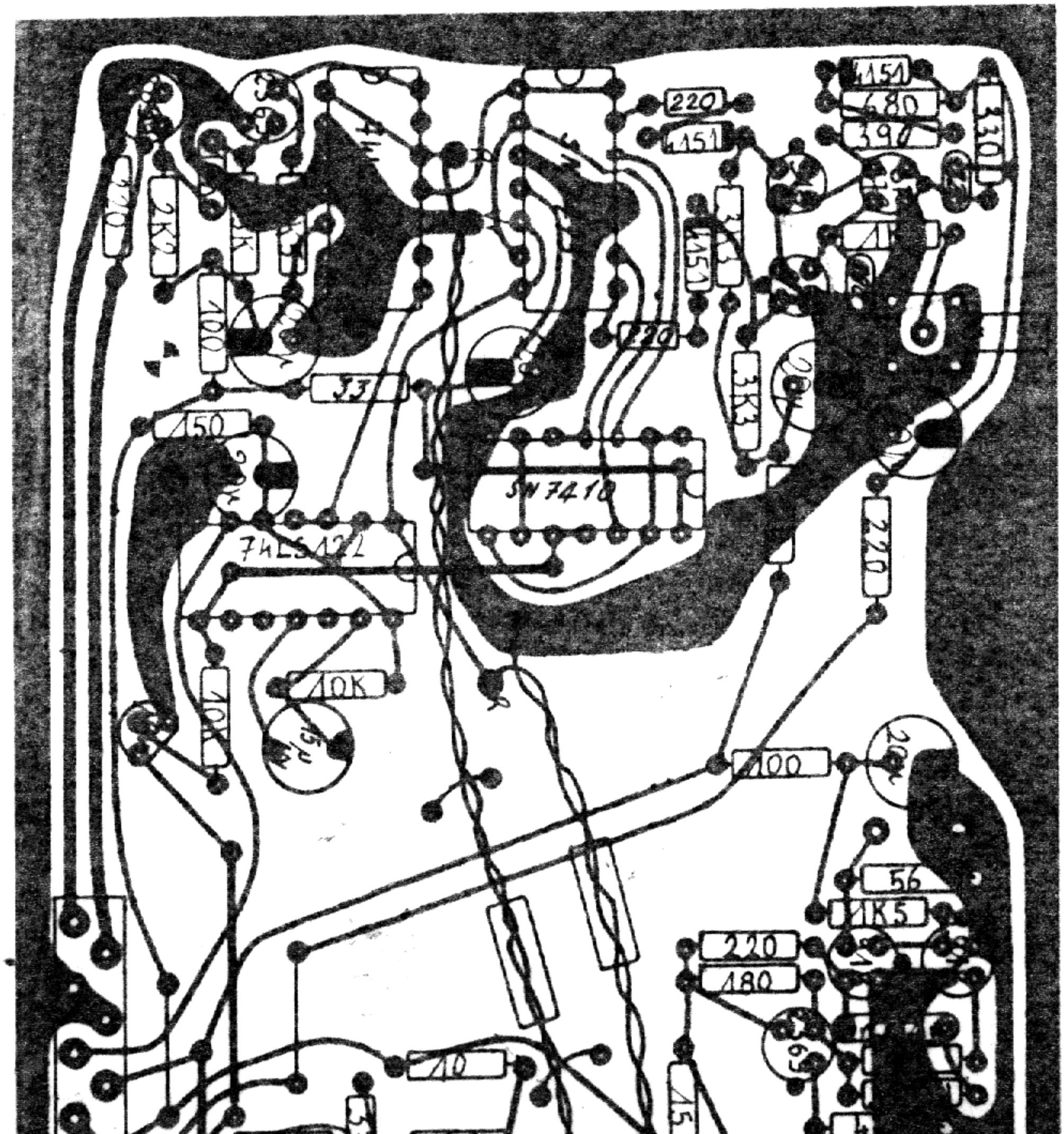
220
1151
1151
680
390
330
2K2
1K
1000
1151
220
33
3K3
150
SN7410
74LS122
220
10K
10K
100
56
1K5
220
180
10
150

330
220
100
3K3
15K
4K5
15
330
10K
2K2
27K
0µ1
74LS30
74LS00
74LS00
741
20µ
15µ
400

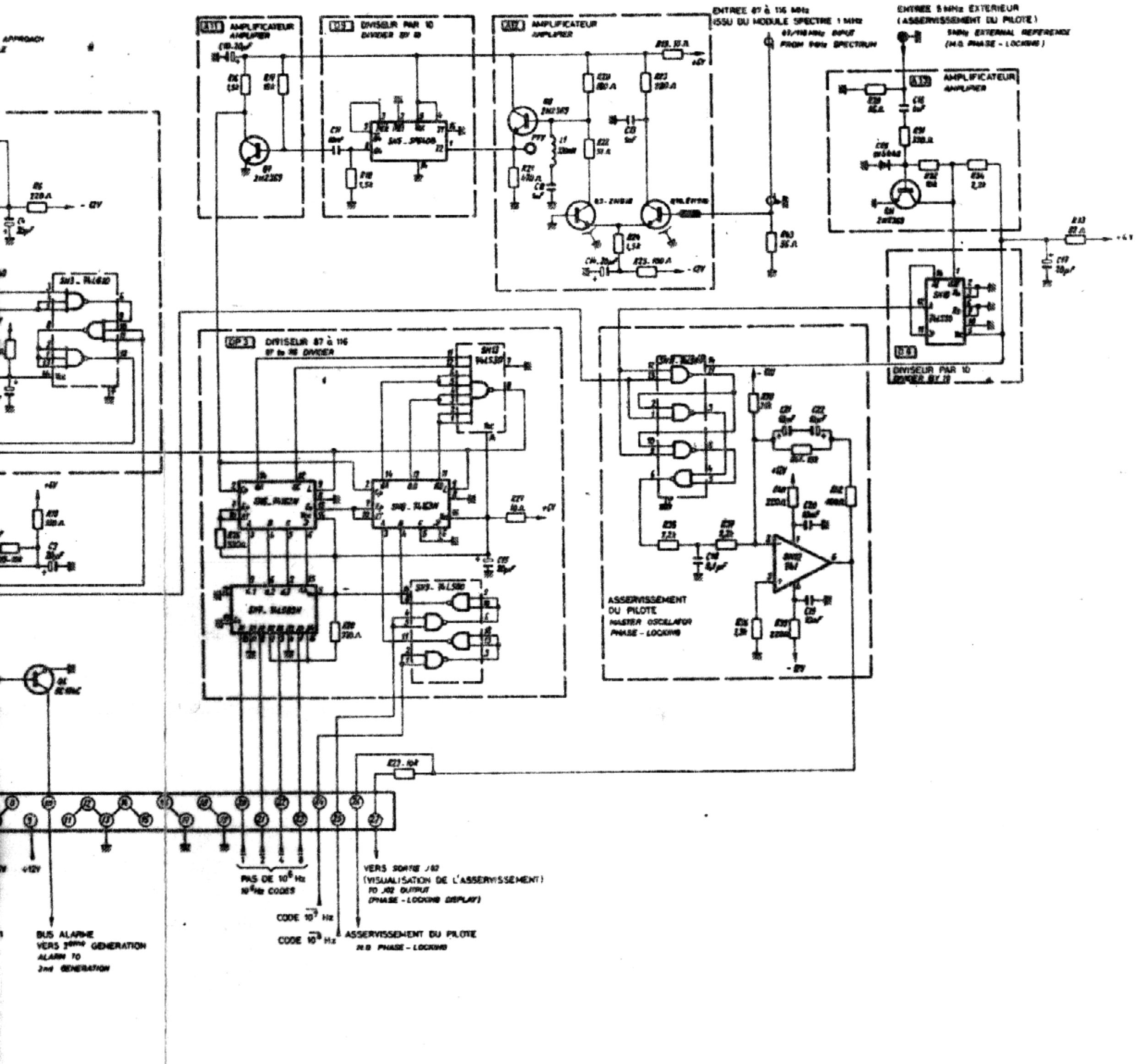
AMPLIFICATEUR
AMPLIFIER
DIVISEUR PAR 10
DIVIDER BY 10
AMPLIFICATEUR
AMPLIFIER
ENTREE 87 à 116 MHz
ISSU DU MODULE SPECTRE 1 MHz
87/116 MHz INPUT
FROM MHz SPECTRUM
ENTREE 5 MHz EXTERIEUR
(ASSERVISSEMENT DU PILOTE)
5MHz EXTERNAL REFERENCE
(M.O. PHASE - LOCKING)
AMPLIFICATEUR
AMPLIFIER
DIVISEUR PAR 10
DIVIDER BY 10
DIVISEUR 87 à 116
87 to 116 DIVIDER
ASSERVISSEMENT
DU PILOTE
MASTER OSCILLATOR
PHASE - LOCKING
PAS DE 10^6 Hz
10^6Hz CODES
VERS SORTIE J02
(VISUALISATION DE L'ASSERVISSEMENT)
TO J02 OUTPUT
(PHASE - LOCKING DISPLAY)
CODE 10^7 Hz
CODE 10^8 Hz
ASSERVISSEMENT DU PILOTE
M.O. PHASE - LOCKING
BUS ALARME
VERS 2ème GENERATION
ALARM TO
2nd GENERATION

5 MHz external reference

PT1

Phase locking approach to output module

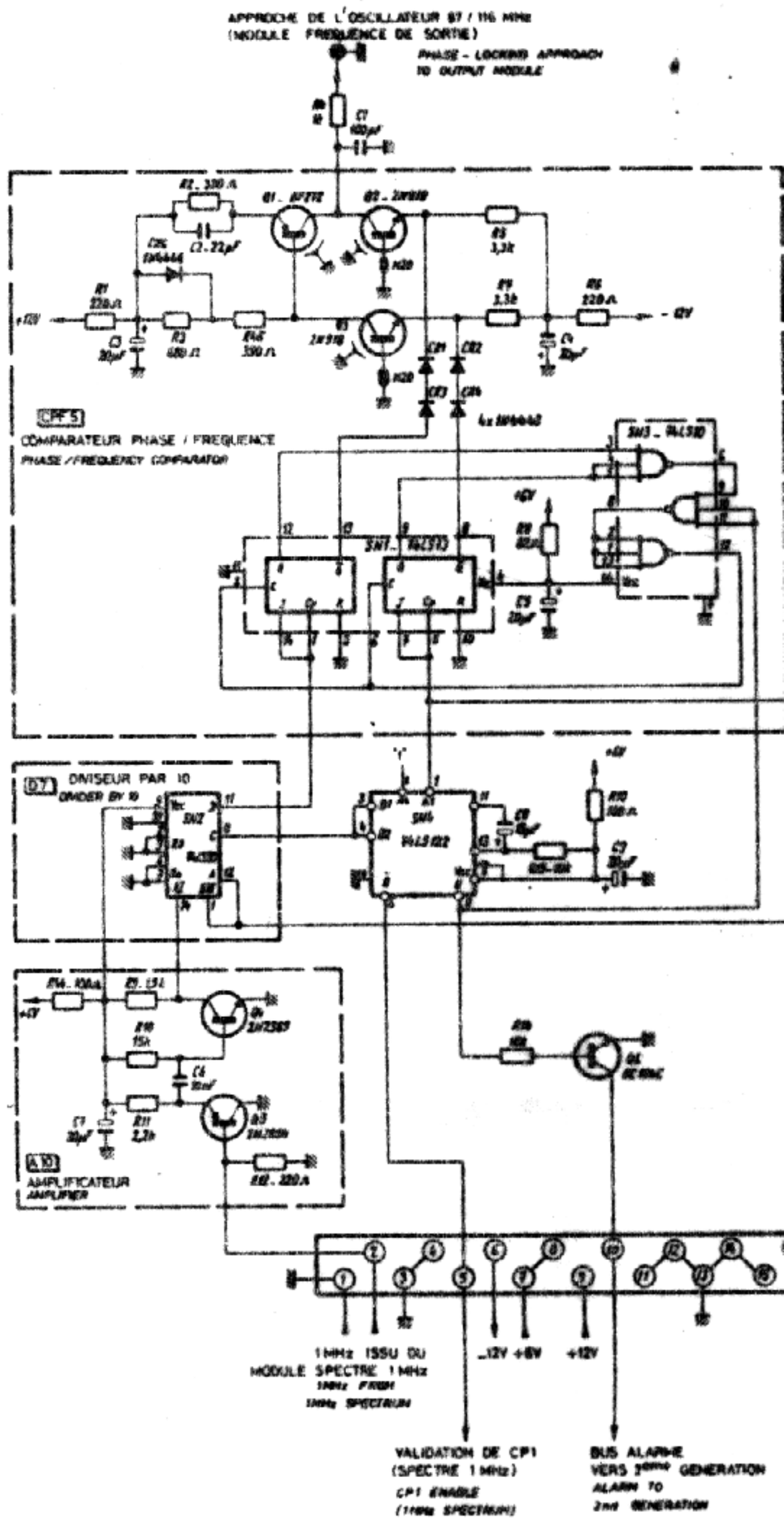

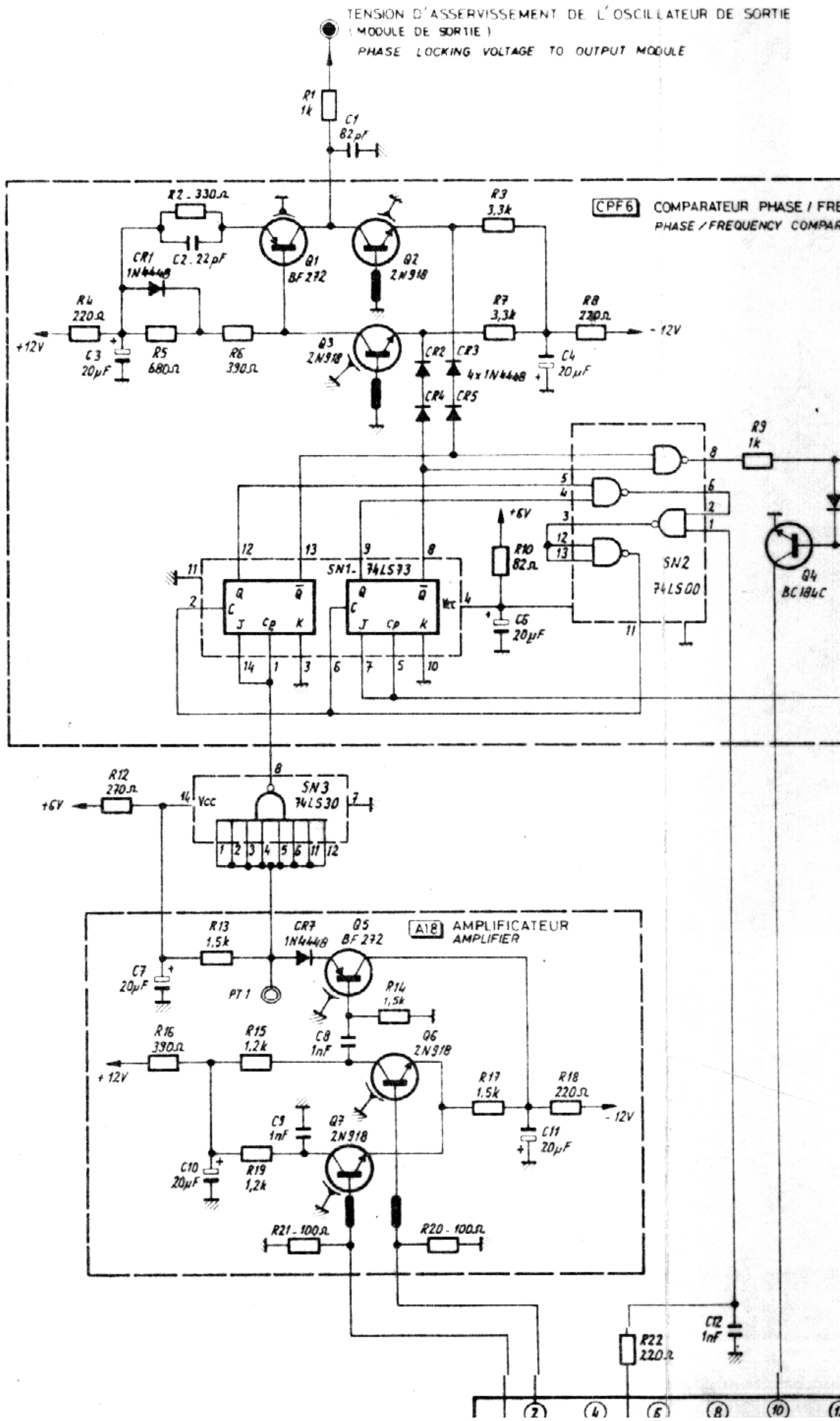
TENSION D'ASSERVISSEMENT DE L'OSCILLATEUR DE SORTIE
(MODULE DE SORTIE)
PHASE LOCKING VOLTAGE TO OUTPUT MODULE
R1 1k
C1 82pF
CPF6
COMPARATEUR PHASE / FRE
PHASE / FREQUENCY COMPAR
R2 330Ω
C2 22pF
CR1 1N4448
Q1 BF 272
Q2 2N918
R3 3,3k
R4 220Ω
+12V
C3 20µF
R5 680Ω
R6 390Ω
Q3 2N918
R7 3,3k
R8 220Ω
-12V
CR2 CR3
4x1N4448
CR4 CR5
C4 20µF
R9 1k
Q4 BC184C
+6V
R10 82Ω
C6 20µF
SN1 74LS73
SN2 74LS00
R12 270Ω
SN3 74LS30
Vcc
A18
AMPLIFICATEUR
AMPLIFIER
R13 1,5k
CR7 1N4448
Q5 BF 272
C7 20µF
PT1
R14 1,5k
R16 390Ω
R15 1,2k
C8 1nF
Q6 2N918
R17 1,5k
R18 220Ω
C9 1nF
Q7 2N918
C10 20µF
R19 1,2k
C11 20µF
R21 100Ω
R20 100Ω
R22 220Ω
C12 1nF

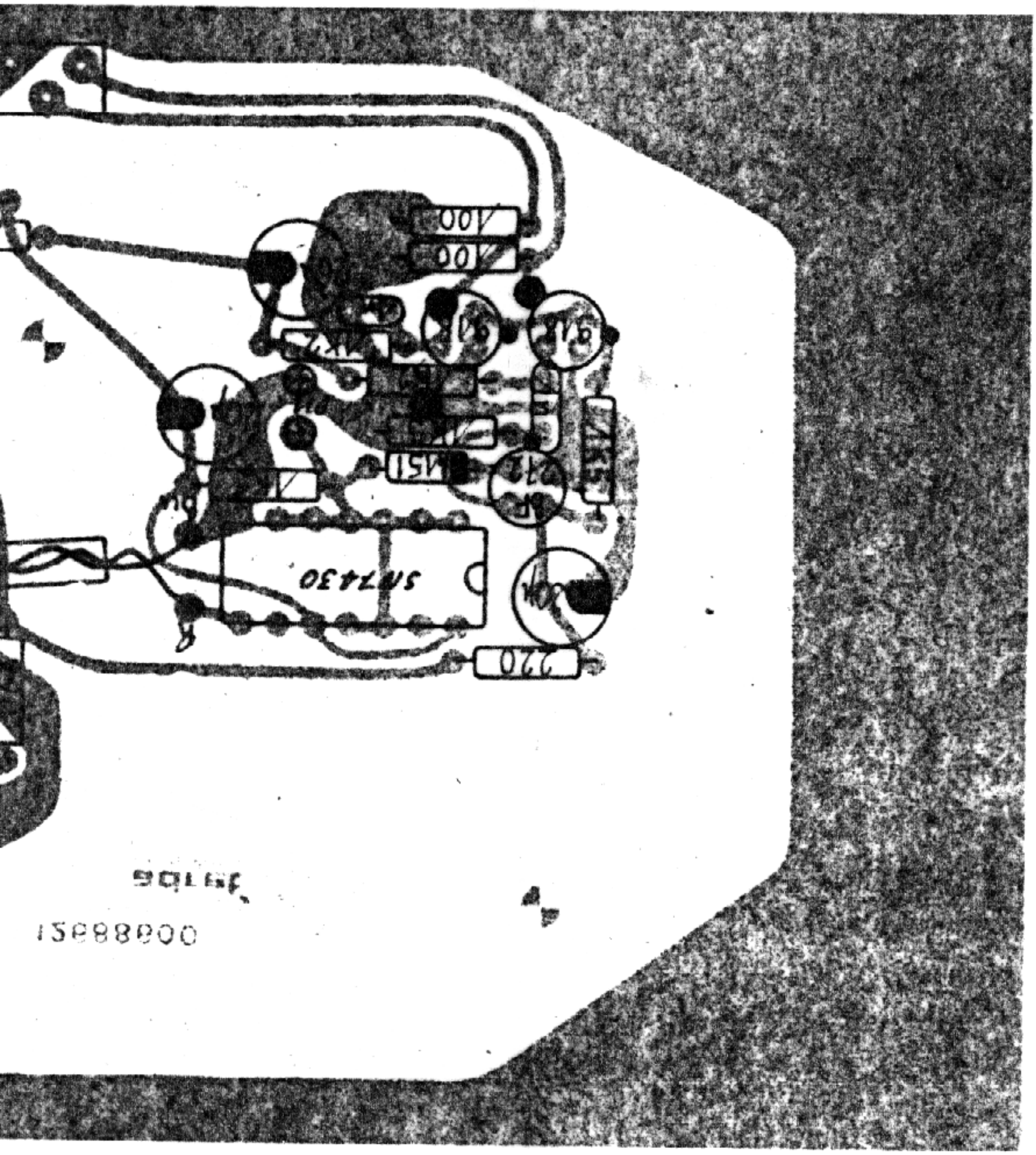
SN7430
220
100
100
15888000

CHAPTER V – FINAL CHECK

The purpose of this chapter is to provide the user which all necessary information about performance control.
This chapter is divided into three sections :

V.1 - ACESS TO INTERNAL CIRCUITS

Screw off the two fixing screws on the rear panel of the instrument, then pull out the two upper and lower sliding panels.

V.2 - PRE-CONTROL

When the instrument does not operate properly, it is necessary to check that it is being used correctly (controls setting according to the operation mode).
Check the mains voltage value : it should not vary ± 10 % its nominal value.

V.3 - PERIODICAL CONTROLS

The periodical controls consist mainly in checking the performance as they have been defined in chapter I : SPECIFICATIONS.
They are necessary whenever a fault is detected in the instrument operation, or after quite a long storage time.

LIST OF REQUIRED MEASURING INSTRUMENTS

FUNCTION	SPECIFICATIONS	INSTRUMENTS USED
VHV DC supply	0 to 1500 V	H. BOUCHET Model A 209
AC power supply	45 Hz to 400 Hz Power : 200 VA	BOONTON Model 250
Ammeter	Caliber : 500 mA	METRIX Model 340
Oscilloscope	75 MHz bandwidth	HEWLETT PACKARD 180 C
DC Voltmeter	200 mV to 1200 V	J. FLUKE Model 8000 A
Frequency standard receiver	Tuning frequency : 15/200 kHz Resolution : 20 Hz Outputs : 1,5 and 10 MHz	ADRET ELECTRONIQUE Model 4101
Frequency meter	0 to 500 MHz - 9 digits Display time : 0.2 s to 5 s	SCHLUMBERGER PH 2523
Frequency programmer	Positive TTL Logic 1-2-4-8 BCD Code	ADRET ELECTRONIQUE ECF 134 + Head 5104
Spectrum analyzer	0 to 1.5 GHz	HEWLETT PACKARD 8558 B
Spectrum analyzer + XY graphic recorder	Dynamic range : 120 dB Frequency range : 0 to 1 MHz	ADRET ELECTRONIQUE Series 6000 : 6100 mainframe 6303 and 6503 plug-ins
Substractive mixer	0.2 to 500 MHz	ADRET ELECTRONIQUE ECF 59

In order to facilitate maintenance and adjustments, all the measurements to be made are listed below, in the order of checking.

I APPEARANCE
II MAINS INSULATION
III POWER SUPPLY
IV PHASE-LOCKING
V OUTPUT/ALARM FREQUENCY
  a) Local Mode
  b) Remote Mode
VI OUTPUT LEVEL
VII SPECTRAL PURITY
  a) Harmonic signals
  b) Non-harmonic signals
  c) Phase noise
  d) Mains signals

9 - LOCKING OF MASTER OSCILLATOR

Locking of the master oscillator is effected in the same module by comparing the phase of the internal 5-MHz reference to that of the external 5-MHz reference in a logical phase comparator consisting of an «EXCLUSIVE OR», shown by figure IV.12 ; the comparison is effected at 500 kHz.

The output of the «EXCLUSIVE OR» provides rectangular waves proportional in duration to the phase difference between the two 500-kHz reference (internal and external) ; these rectangular waves are integrated to provide the locking voltage.

The frequency of the master oscillator is divided by 10 by divider D6 (1-MHz Spectrum module), then by 2 (1-MHz Steps Divider), to produce the internal 500-kHz reference. This is fed to one input of the phase comparator ; the other receives a 500-kHz reference derived by division by 10 from the external 5-MHz signal fed to rear-panel connector **J02**.

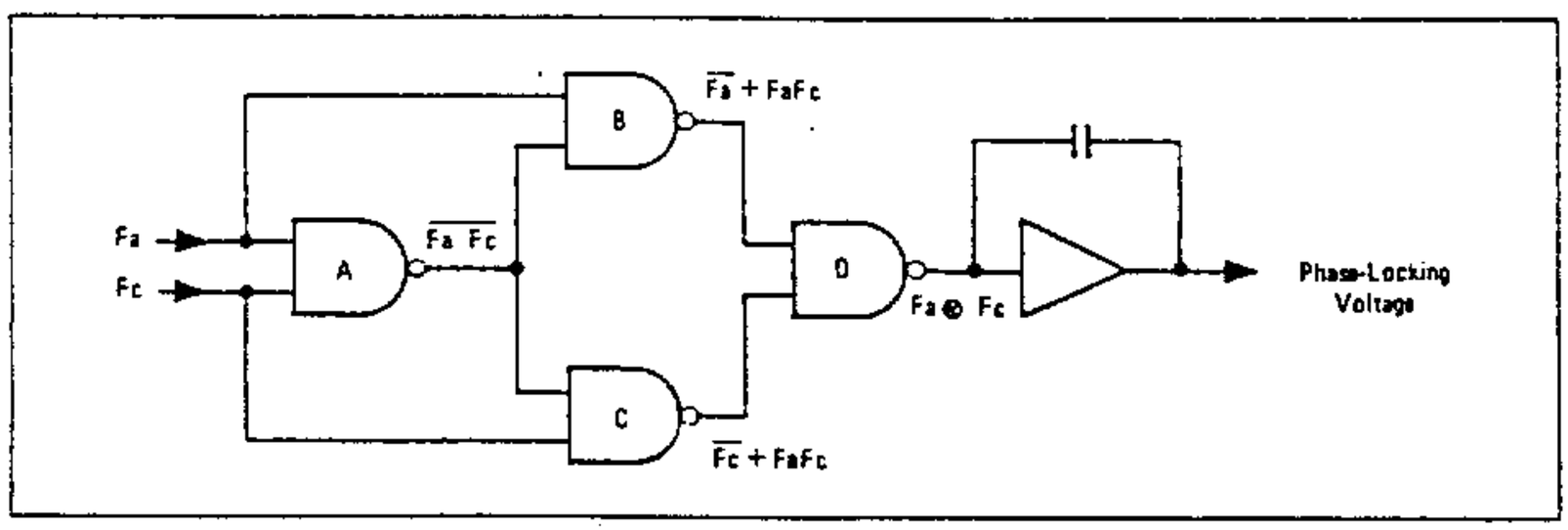

FIGURE IV.12 : Locking principle

Gate A receives Fa and Fc on its inputs and feeds $\overline{FaFc}$ to one input of gates B and C ; Fa and Fc, respectively, are applied to the other input of these gates.

Gate B therefore receives Fa and $\overline{FaFc}$ and applies $\overline{Fa.\overline{FaFc}}$, equal to $\overline{Fa}$ + FaFc, to one input of gate D.

Gate C receives Fc and $\overline{FaFc}$ and applies $\overline{Fc.\overline{FaFc}}$, equal to $\overline{Fc}$ + FaFc, to the other input of gate D.

Gate D therefore provides $\overline{(\overline{Fa} + FaFc)\ (\overline{Fc} + FaFc)}$, equal to :

$$= \overline{(\overline{Fa} + FaFc)} + \overline{(\overline{Fc} + FaFc)}$$
$$= (Fa + \overline{FaFc}) + (Fc + \overline{FaFc})$$
$$= Fa\ (\overline{Fa} + \overline{Fc}) + Fc\ (\overline{Fa} + \overline{Fc})$$
$$= (Fa + Fc)\ (\overline{Fa} + \overline{Fc})$$
$$= (Fa\overline{Fc}) + (\overline{Fa}Fc)$$

The expression $Fa\overline{Fc} + \overline{Fa}Fc$ is the function provided by an «EXCLUSIVE OR» ($Fa \oplus Fc$).

When the two phases are exactly in quadrature, the output of gate D is balanced, but if the phase of one varies with respect to the other, the duty cycle changes in proportion to the phase difference.

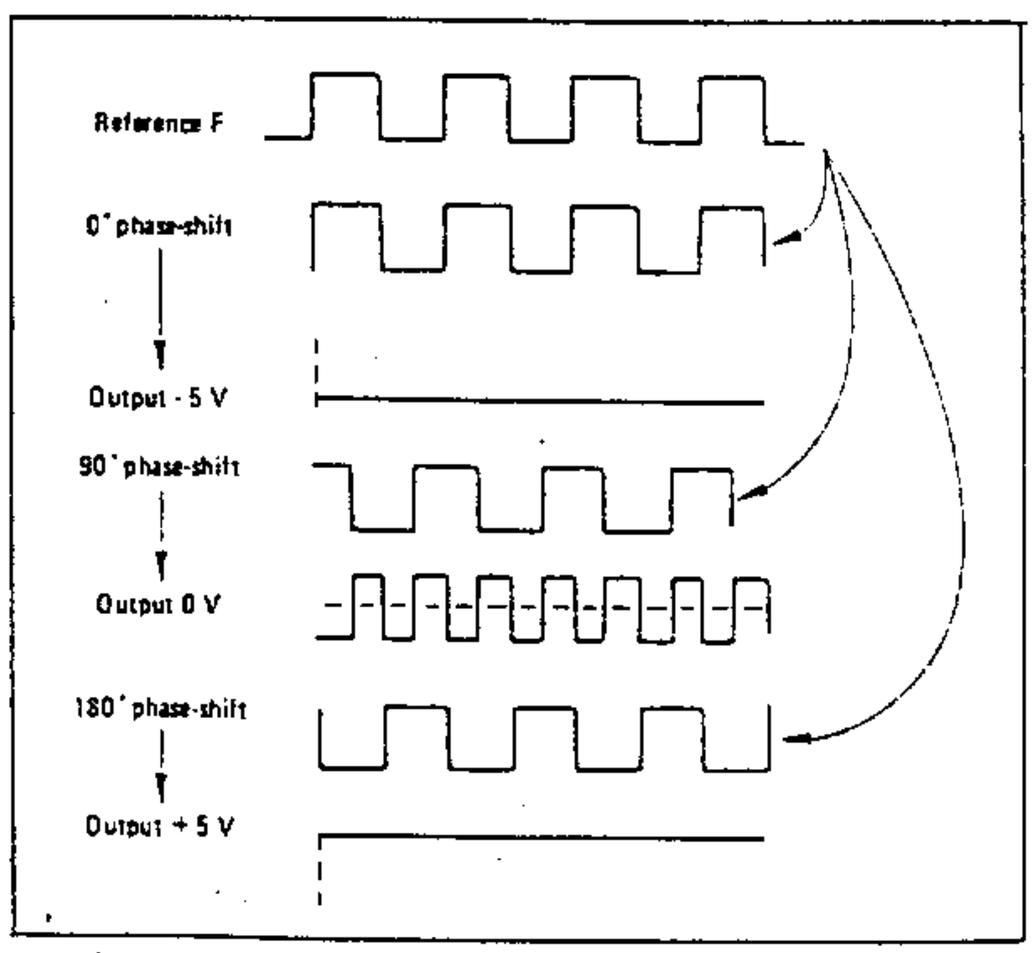

The output of gate D is integrated by an A741 amplifier mounted as a mean-value detector (123), which drives the locking input of the master oscillator and also provides a voltage ranging from − 5 to + 5 V as a function of the phase difference. This voltage is available on rear-panel connector **J03** and may be used to monitor locking.

This voltage is negative when the signals are in phase, 0 for a phase difference of 90°, and positive for a phase difference of 180°, as shown in figure VI.13.

It should be noted that the output voltage of this type of phase comparator is 0 if one of the input signals is absent ; in consequence, if the synchronization frequency disappears, the master oscillator frequency will remain unchanged if the operator has taken the precaution of adjusting the galvanometer to 0 using the tuning potentiometer.

FIGURE IV.13 : Output signal phase shift.

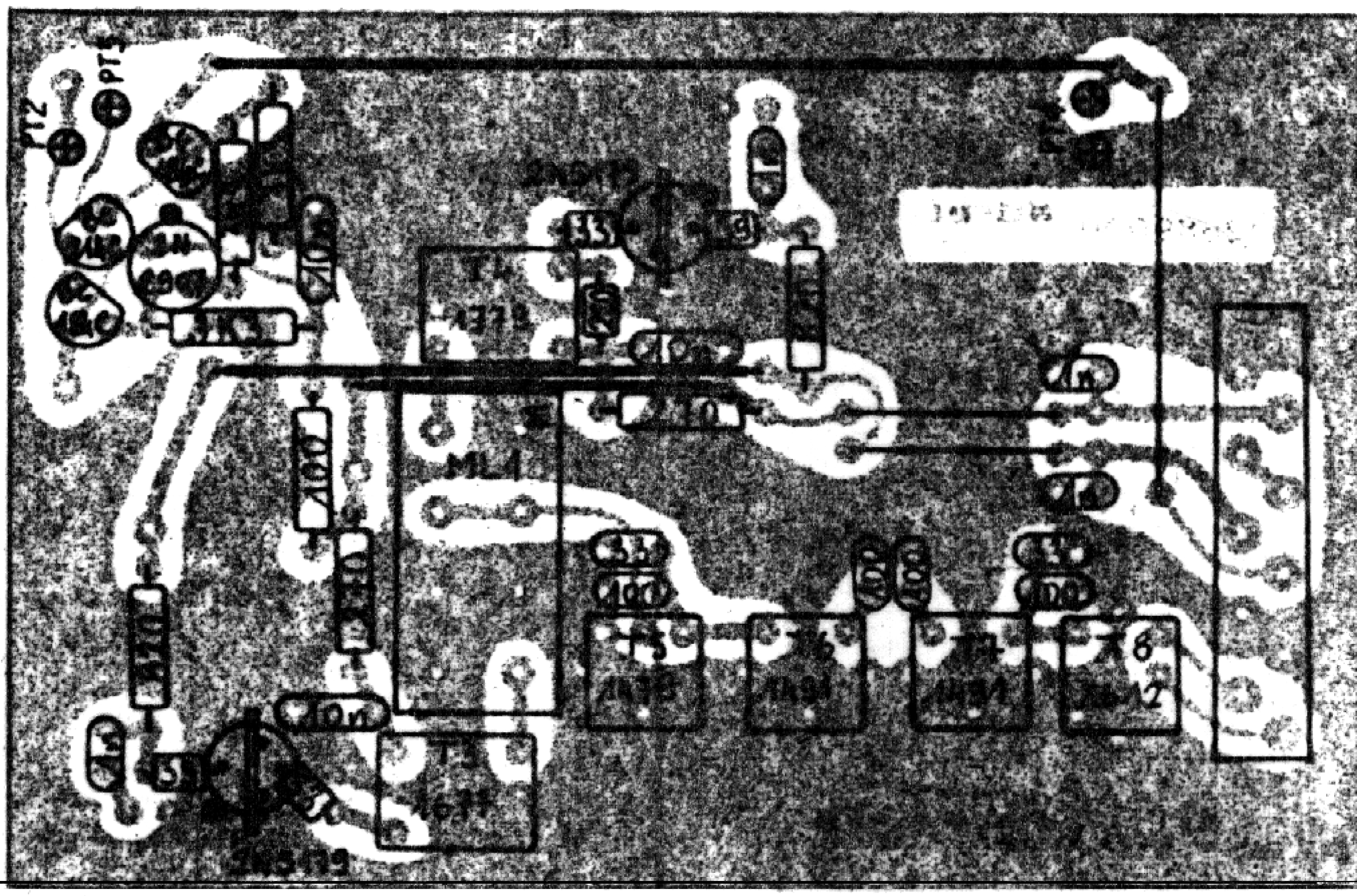

WIRING AND COMPONENT LAYOUT
DIAGRAM N° 932139 B

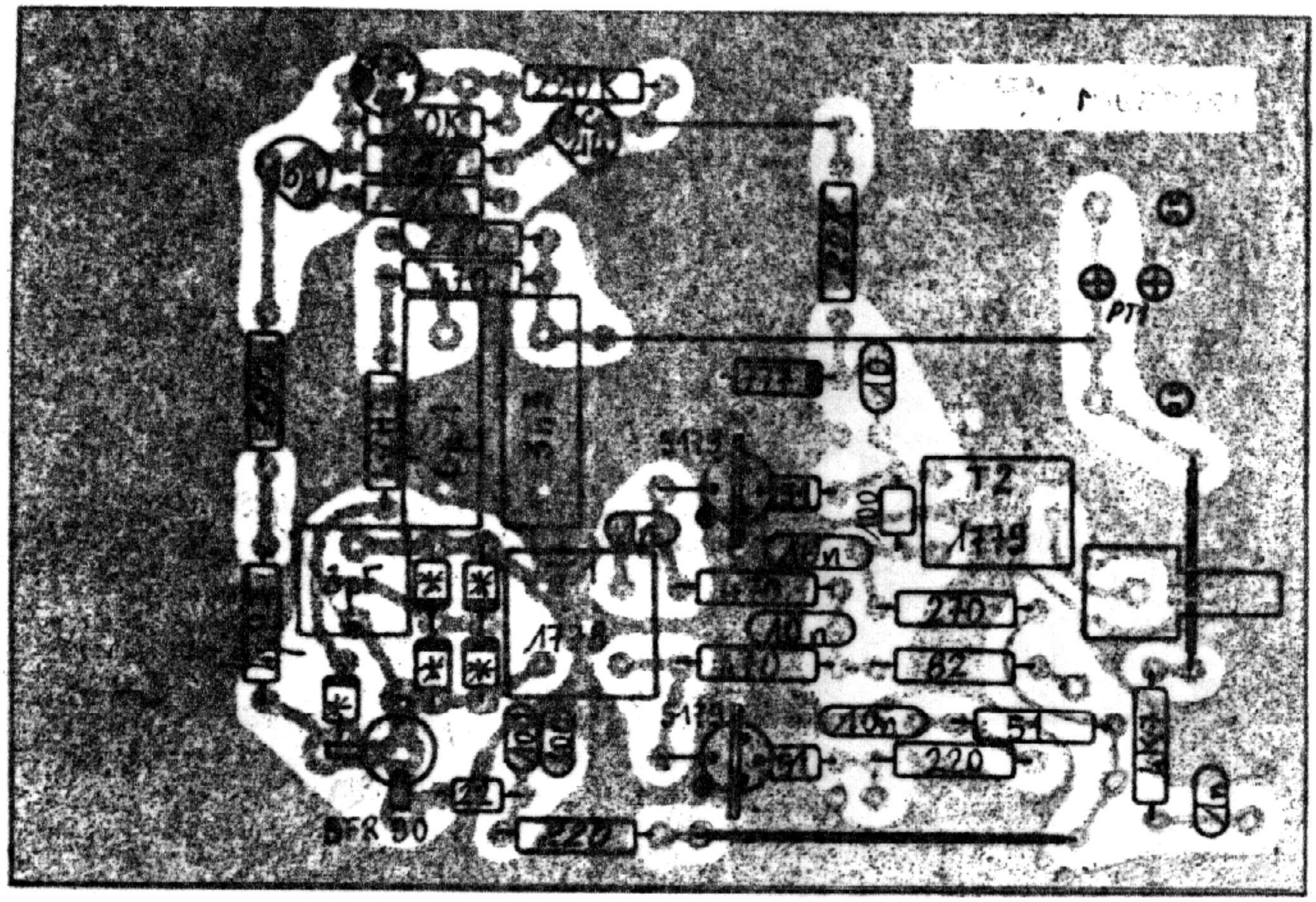

WIRING AND COMPONENT LAYOUT
DIAGRAM N° 932138 C 2/2

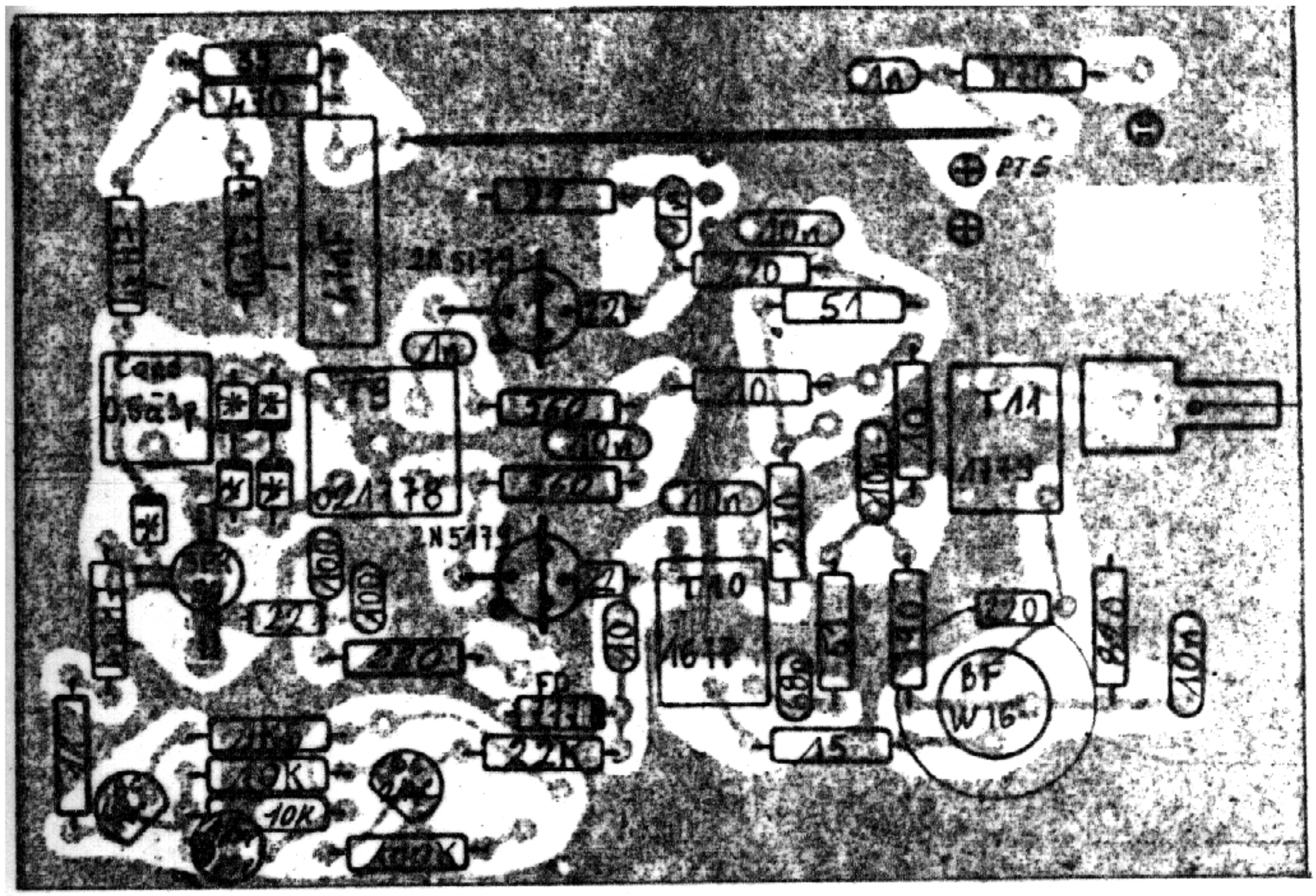

WIRING AND COMPONENT LAYOUT
DIAGRAM N° 932137 C 2/2

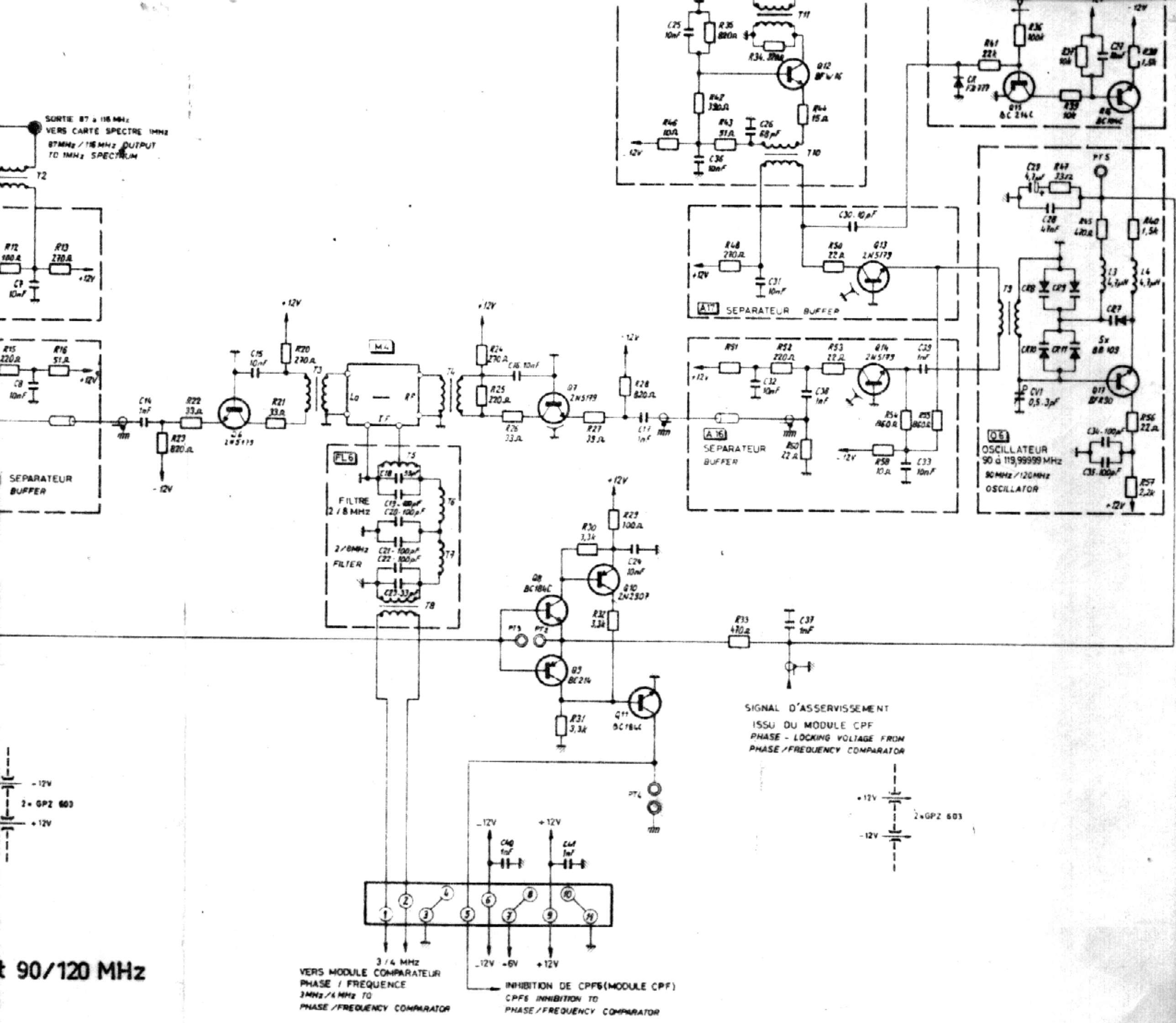

t 90/120 MHz

OUTPUT MODULE
CIRCUIT DIAGRAM N° 976887

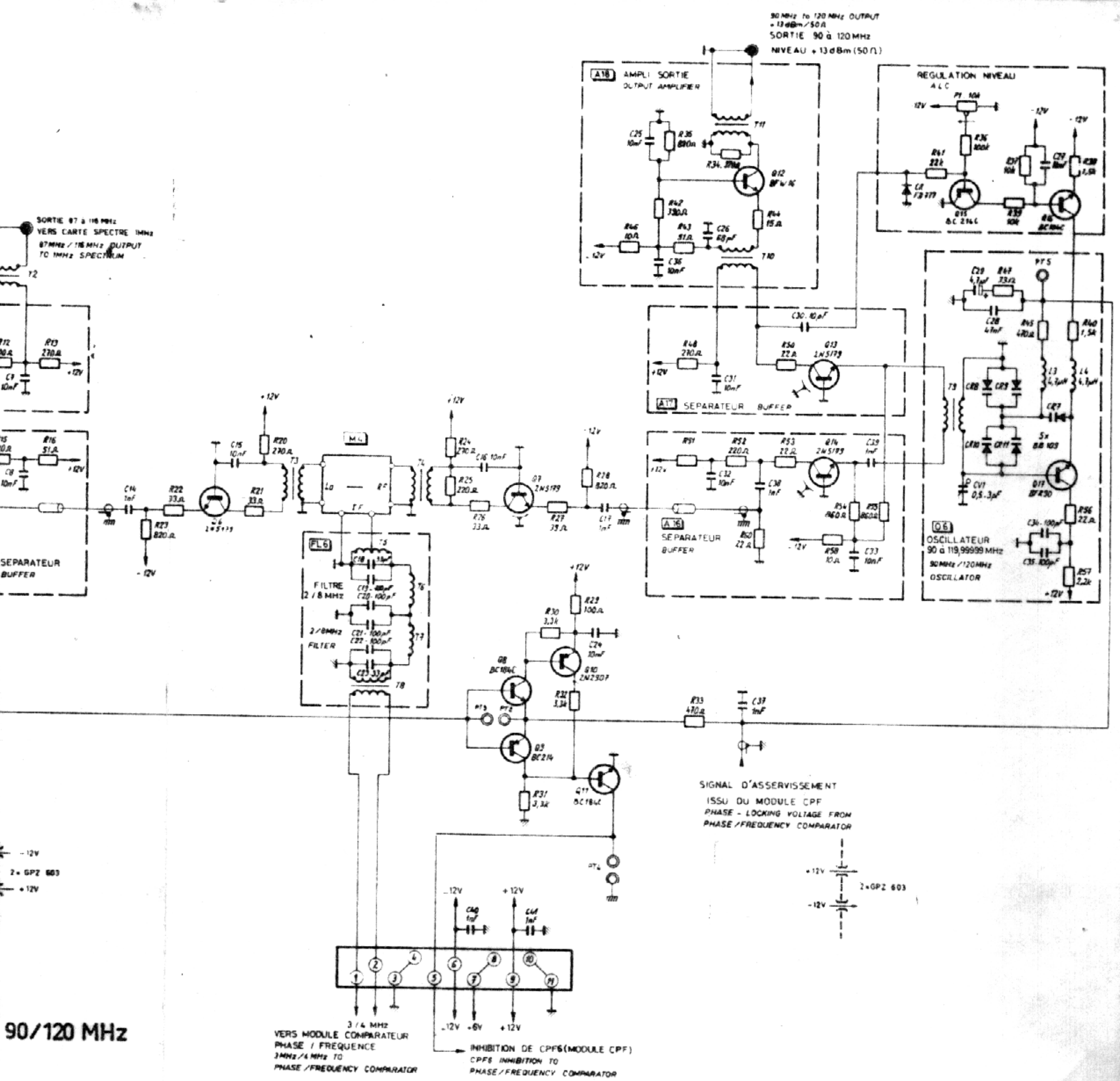

90/120 MHz

OUTPUT MODULE

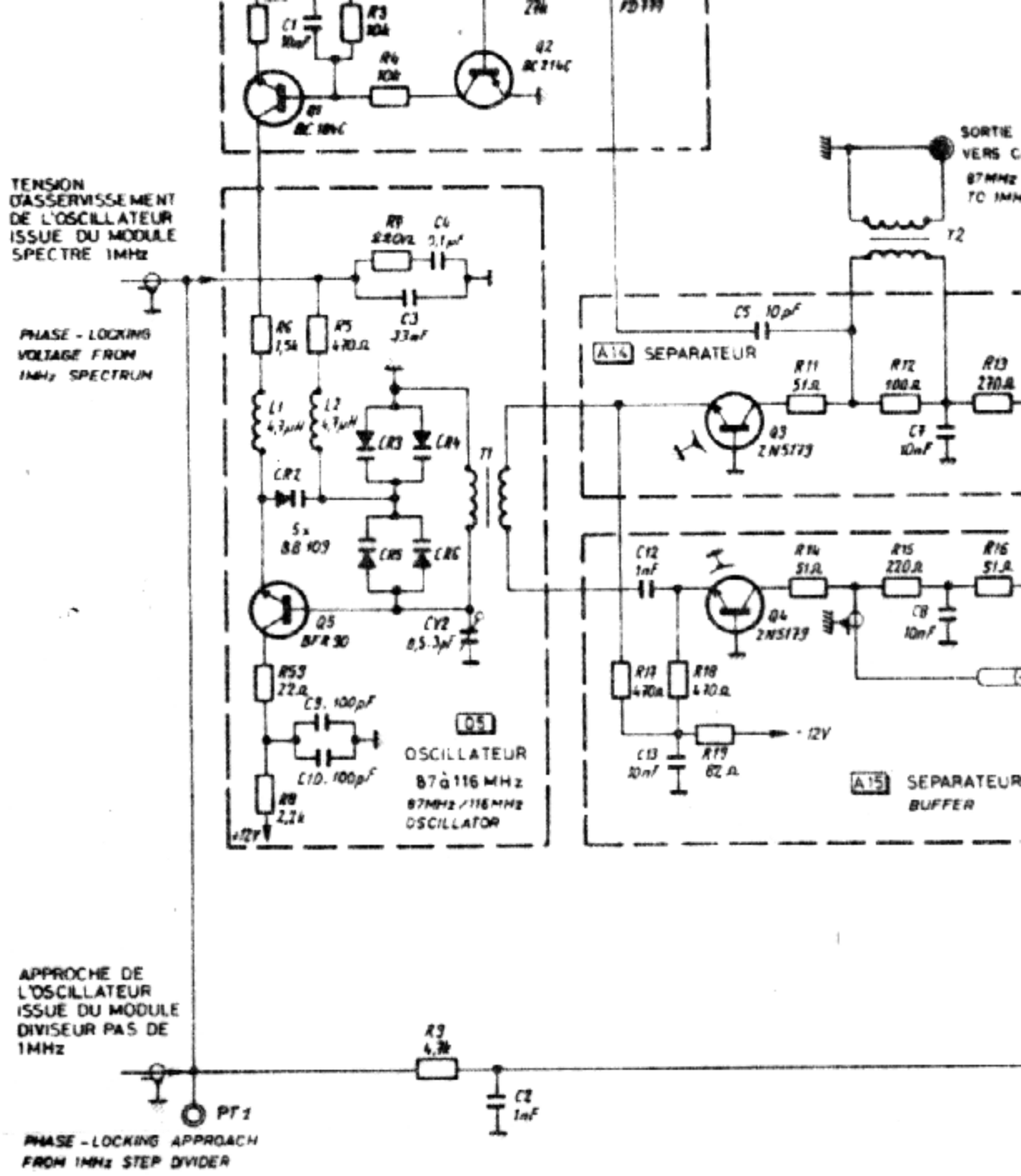
TENSION D'ASSERVISSEMENT DE L'OSCILLATEUR ISSUE DU MODULE SPECTRE 1MHz
PHASE - LOCKING VOLTAGE FROM 1MHz SPECTRUM
APPROCHE DE L'OSCILLATEUR ISSUE DU MODULE DIVISEUR PAS DE 1MHz
PT 1
PHASE - LOCKING APPROACH FROM 1MHz STEP DIVIDER
OSCILLATEUR
87 à 116 MHz
87MHz / 116 MHz OSCILLATOR
A14 SEPARATEUR
A15 SEPARATEUR BUFFER
SORTIE VERS C
87MHz TO 1MH
+12V

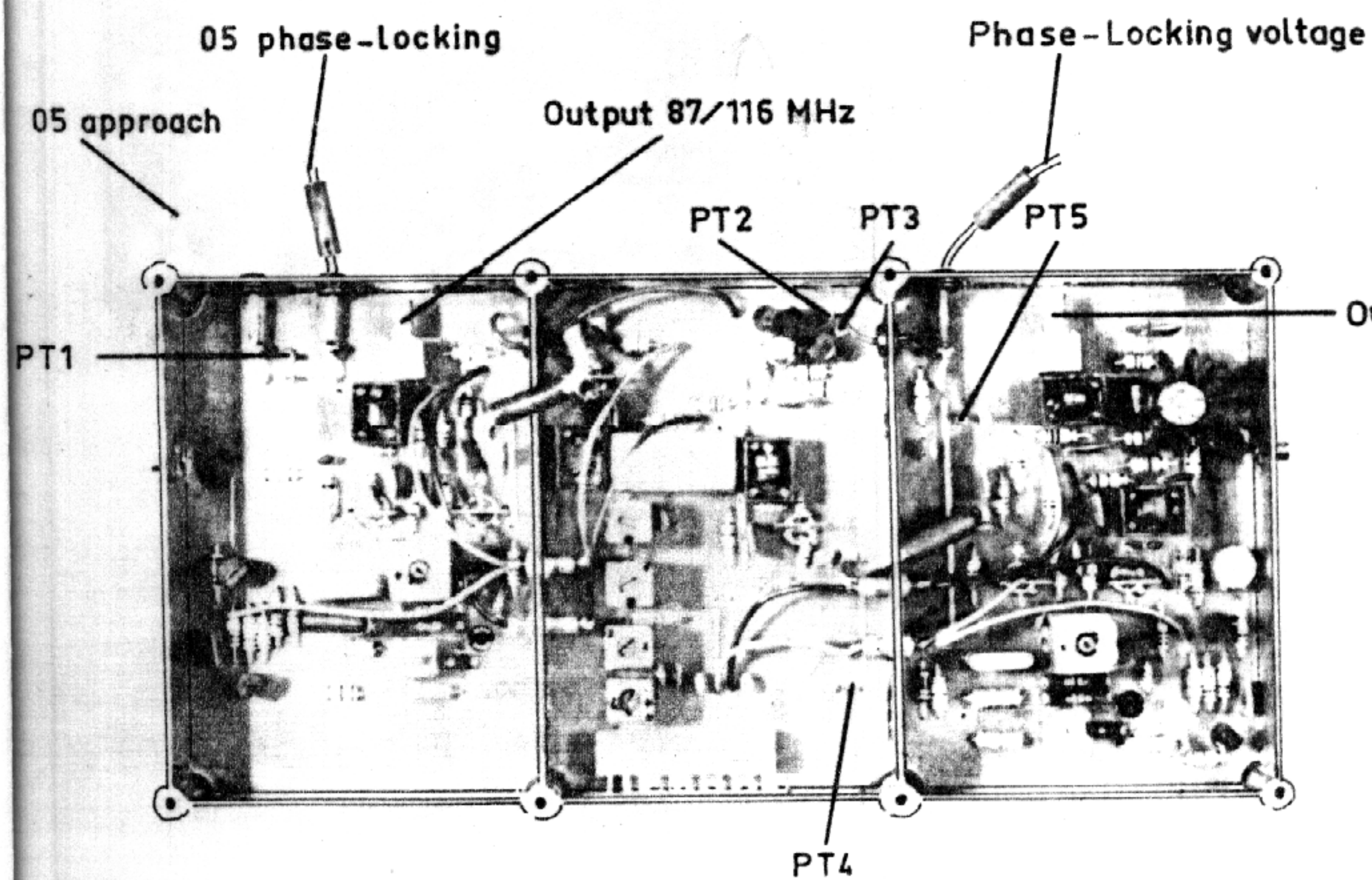
05 phase-locking
Phase-Locking voltage
05 approach
Output 87/116 MHz
PT2
PT3
PT5
Output 90/1
PT1
PT4

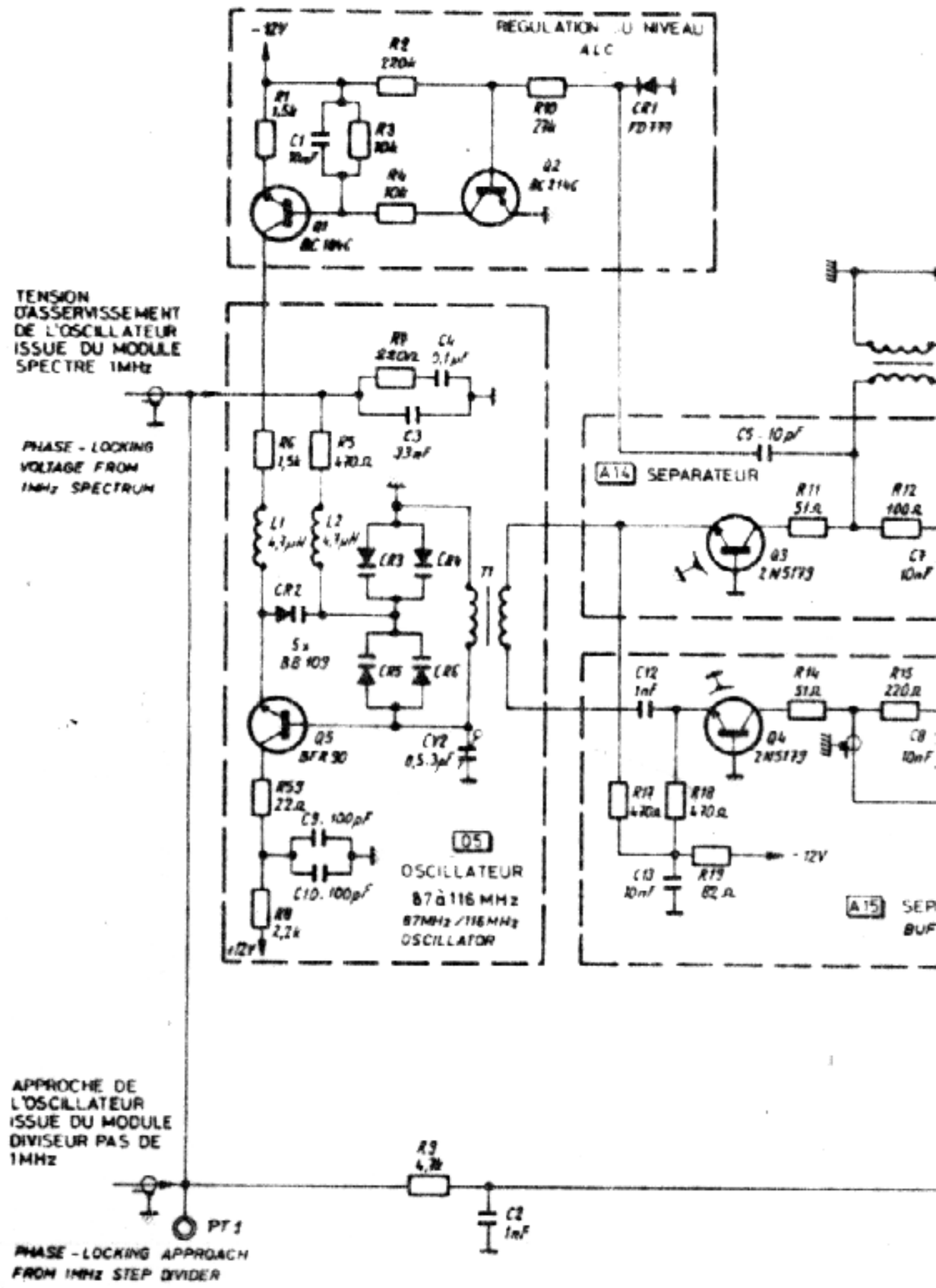
REGULATION DU NIVEAU
ALC
TENSION D'ASSERVISSEMENT DE L'OSCILLATEUR ISSUE DU MODULE SPECTRE 1MHz
PHASE - LOCKING VOLTAGE FROM 1MHz SPECTRUM
A14 SEPARATEUR
05
OSCILLATEUR
87 à 116 MHz
87MHz / 116MHz OSCILLATOR
A15
APPROCHE DE L'OSCILLATEUR ISSUE DU MODULE DIVISEUR PAS DE 1MHz
PT 1
PHASE - LOCKING APPROACH FROM 1MHz STEP DIVIDER

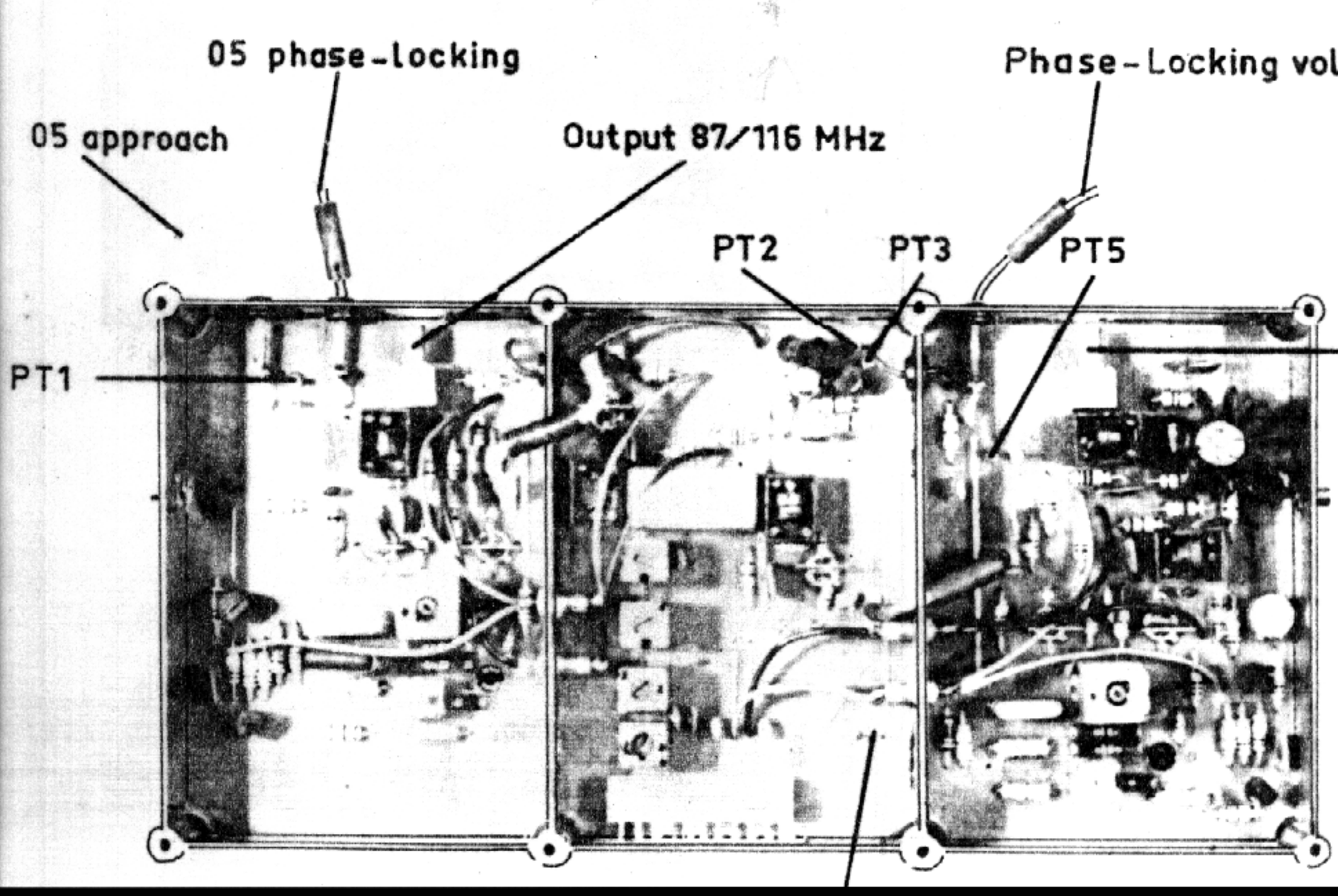
05 phase-locking
Phase-Locking voltage
05 approach
Output 87/116 MHz
PT2
PT3
PT5
PT1
Output 9

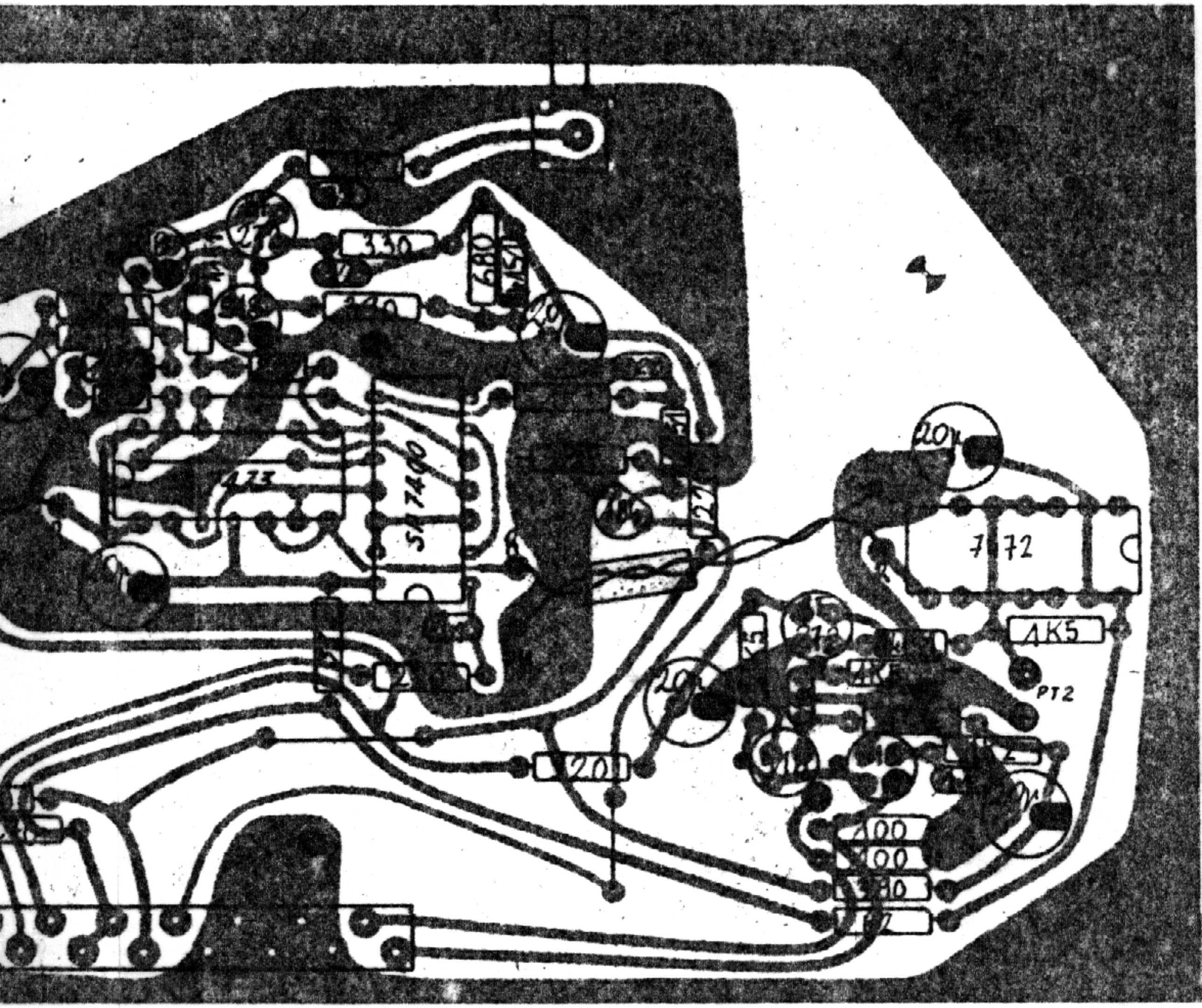
330
SN 7400
72
AK5
PT2

N° d'ESSAI appareils utilisés	CONDITIONS	SANCTIONS
I	APPEARANCE Check that all the sub-units are correctly set up according to descriptive plates.	
II VHV DC Supply 1500 V	MAINS INSULATION After setting the MAINS fuse, send a 1500 V DC voltage on the mains connector, on the one hand between point 2 and groud, and on the other hand between point 3 and ground (See figure VII-1)	No leakage

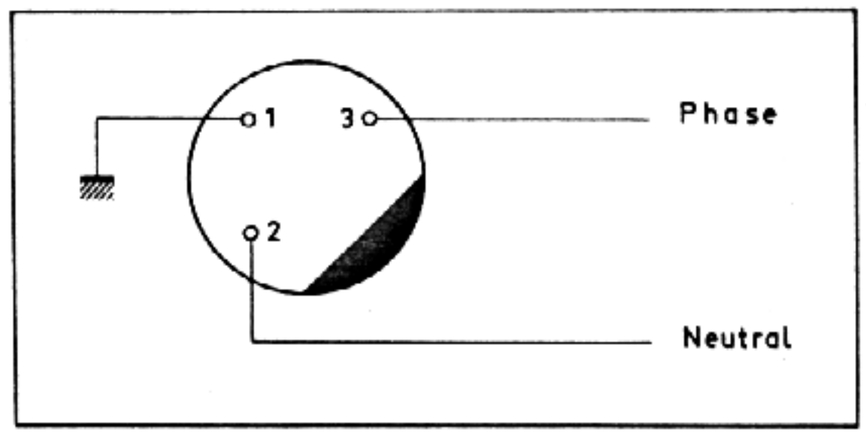

Figure VII-1 - Mains connector insulation measurement

III 45 - 400 Hz 115/230 V AC Supply Alternostat Ammeter DC Voltmeter	POWER SUPPLY Feed the instrument using a 45 Hz to 400 Hz AC supply and an alternostat, as shown in figure VII-2.	

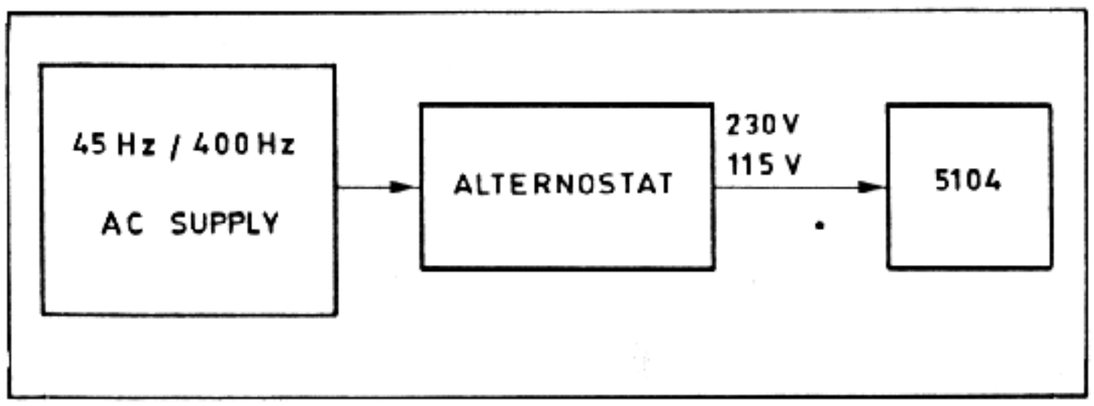

Figure VII-2 - Mains supply adjustment

a) Make supply frequency vary from 45 Hz to 400 Hz successively on both mains voltages 115 V - 230 V. Measure the following voltages on the "ALIM" connector on the rear panel of the mainframe (see figure VII-3) :

+ 12 V with regard to the ground	± 150 mV
- 12 V with regard to the ground	± 150 mV
+ 6 V with regard to the ground	± 100 mV

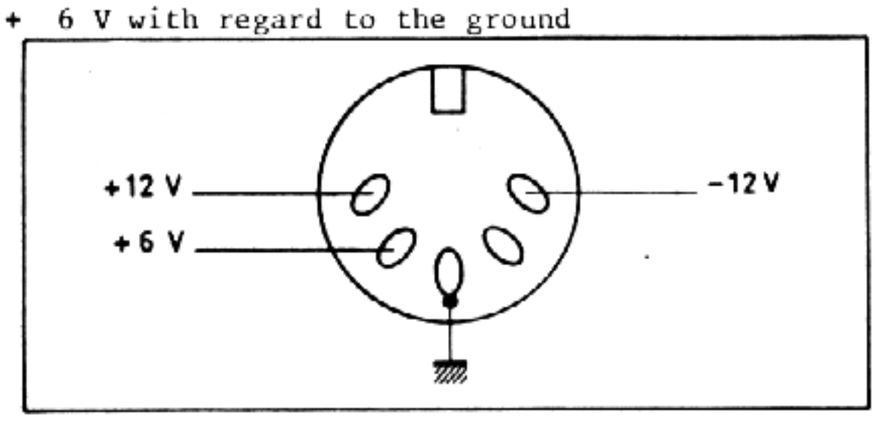

Figure VII-3 - Supply DC voltages measurement

N° d'ESSAI appareils utilisés	CONDITIONS	SANCTIONS
	b) Repeat the preceding test (described in "a") making mains voltage vary from ± 10 % on both ranges.	DC voltages must not vary
	c) Check the current density absorbed by the instrument through an AC ammeter whatever the supply voltage. Apply the formula P = UI.	The power consumed must not exceed 12 VA
IV Reference synthesizer (F = 5 MHz) Oscilloscope Voltmeter	MASTER OSCILLATOR PHASE-LOCKING - Realize the interface shown in figure VII-4.	

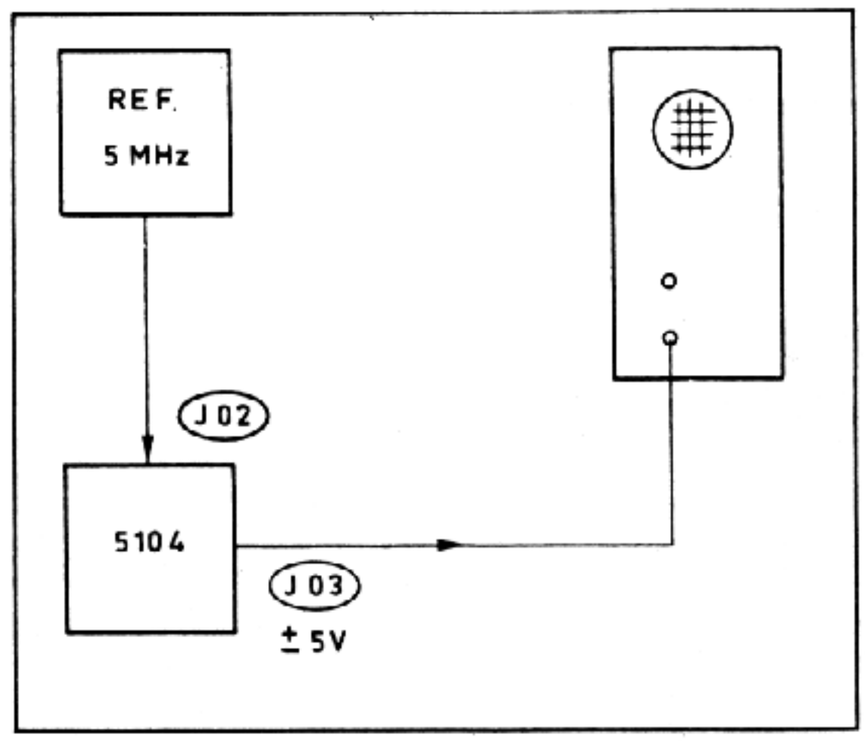

Figure VII-4 - Internal master oscillator phase-locking

- Send the "5 MHz reference" frequency on the (J02) input of the 5104 (input level : 20 mVrms at 1 Vrms/ 50 Ω), and connect the (J03) output to the "A" channel of the oscilloscope.
- Operate the (P01) "MASTER OSCILLATOR FREQUENCY ADJUSTMENT" potentiometer to stop the signal on the oscilloscope from beating, caused by the non phase-locking of the internal master oscillator to the external source.
- While operating (P01), check, on the hand, that the voltage delivered by the (J03) connector does vary from ± 5 V
  and on the other hand, that the (DS01) "alarm" pilot light is switched off.

V ADRET 4101 standard receiver 0 - 500 MHz frequency meter, 10 Hz resolution	OUTPUT FREQUENCY ALARM a) Local Mode - Realize the set up shown in figure VII-5.	

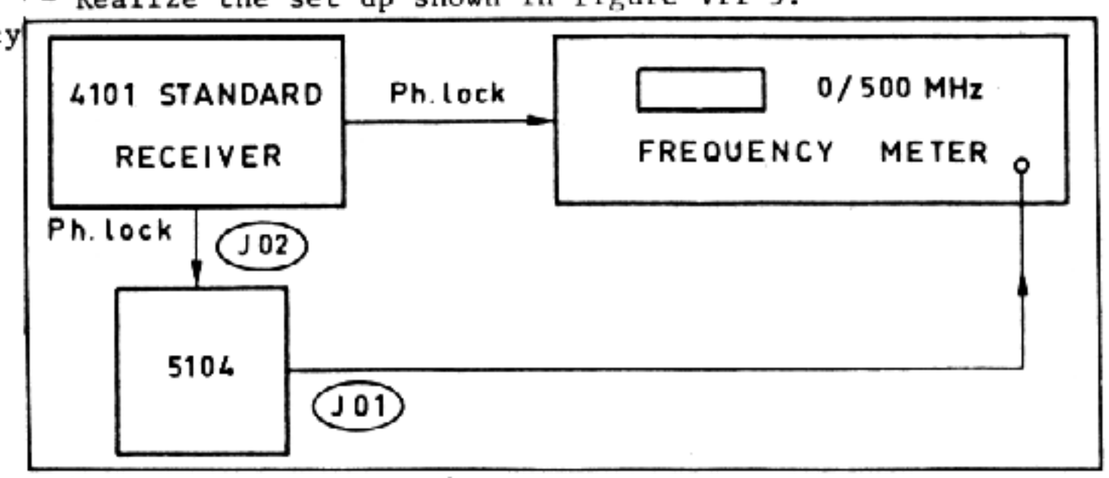

Figure VII-5 - Output frequency

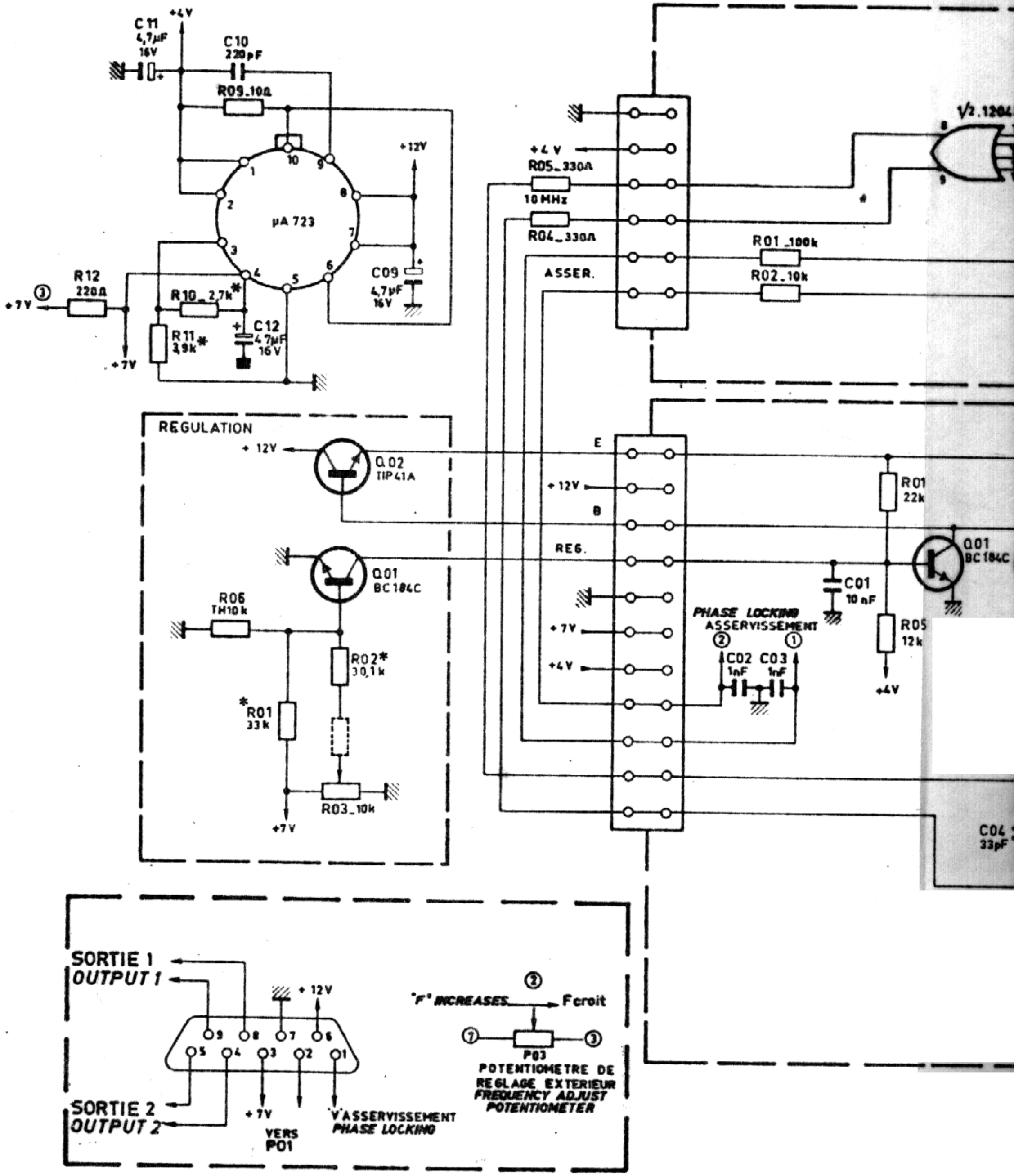
C11
4,7µF
16V
+4V
C10
220pF
R09_100Ω
+12V
µA 723
C09
4,7µF
16V
R12
220Ω
+7V
R10_2,7k*
R11
3,9k*
C12
4,7µF
16V
+7V
REGULATION
+ 12V
Q02
TIP41A
Q01
BC184C
R06
TH10k
R02*
30,1k
*R01
33k
R03_10k
+7V
+4V
R05_330Ω
10MHz
R04_330Ω
ASSER.
R01_100k
R02_10k
1/2.1204
E
+ 12V
B
REG.
+ 7V
+4V
R01
22k
Q01
BC184C
C01
10 nF
PHASE LOCKING
ASSERVISSEMENT
C02 C03
1nF 1nF
R05
12k
+4V
C04
33pF
SORTIE 1
OUTPUT 1
SORTIE 2
OUTPUT 2
+ 12V
+ 7V
VERS
P01
'V' ASSERVISSEMENT
PHASE LOCKING
'F' INCREASES
F croit
P03
POTENTIOMETRE DE
REGLAGE EXTERIEUR
FREQUENCY ADJUST
POTENTIOMETER

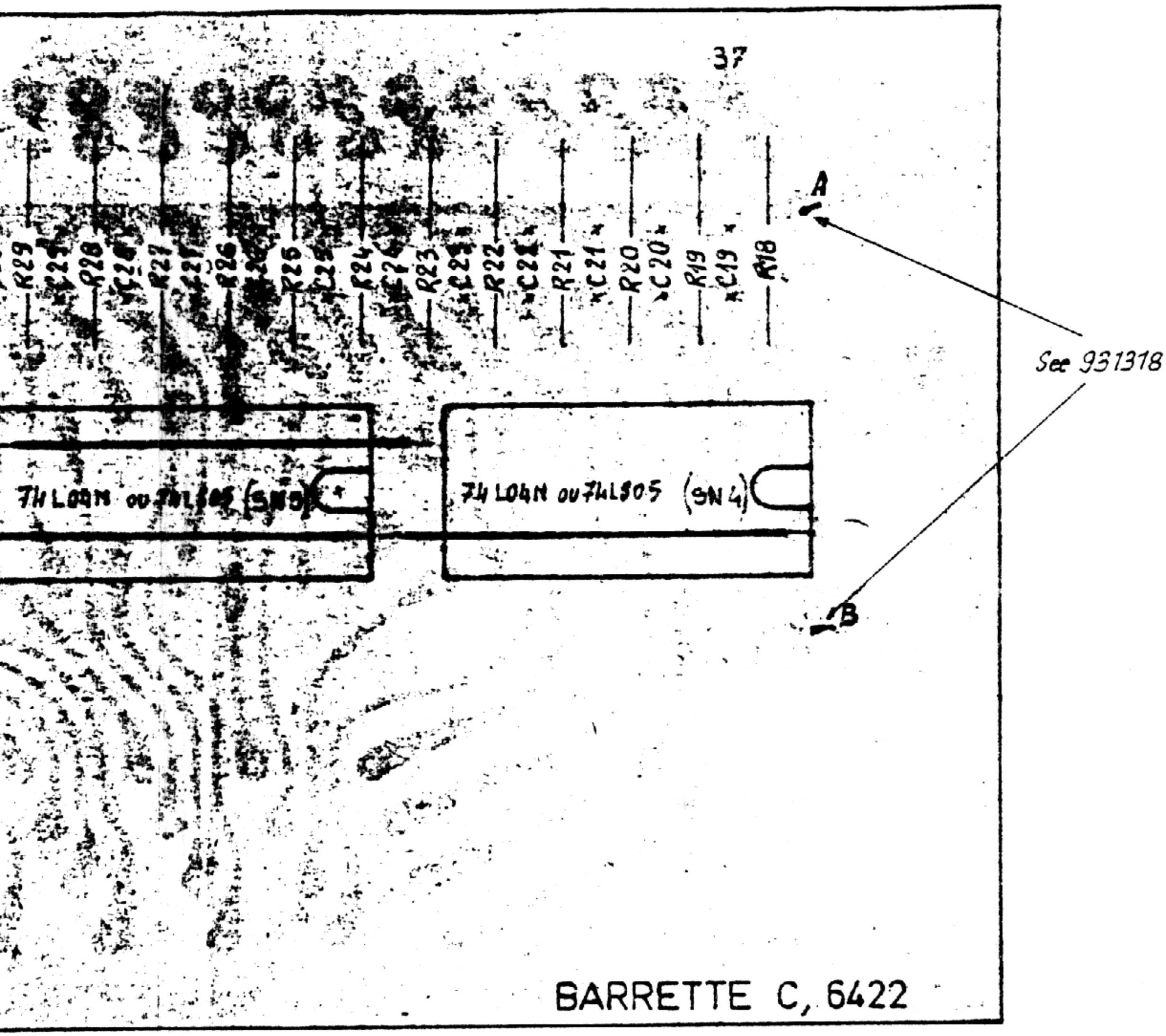

WIRING AND COMPONENT LAYOUT
DIAGRAM N° 931319 C

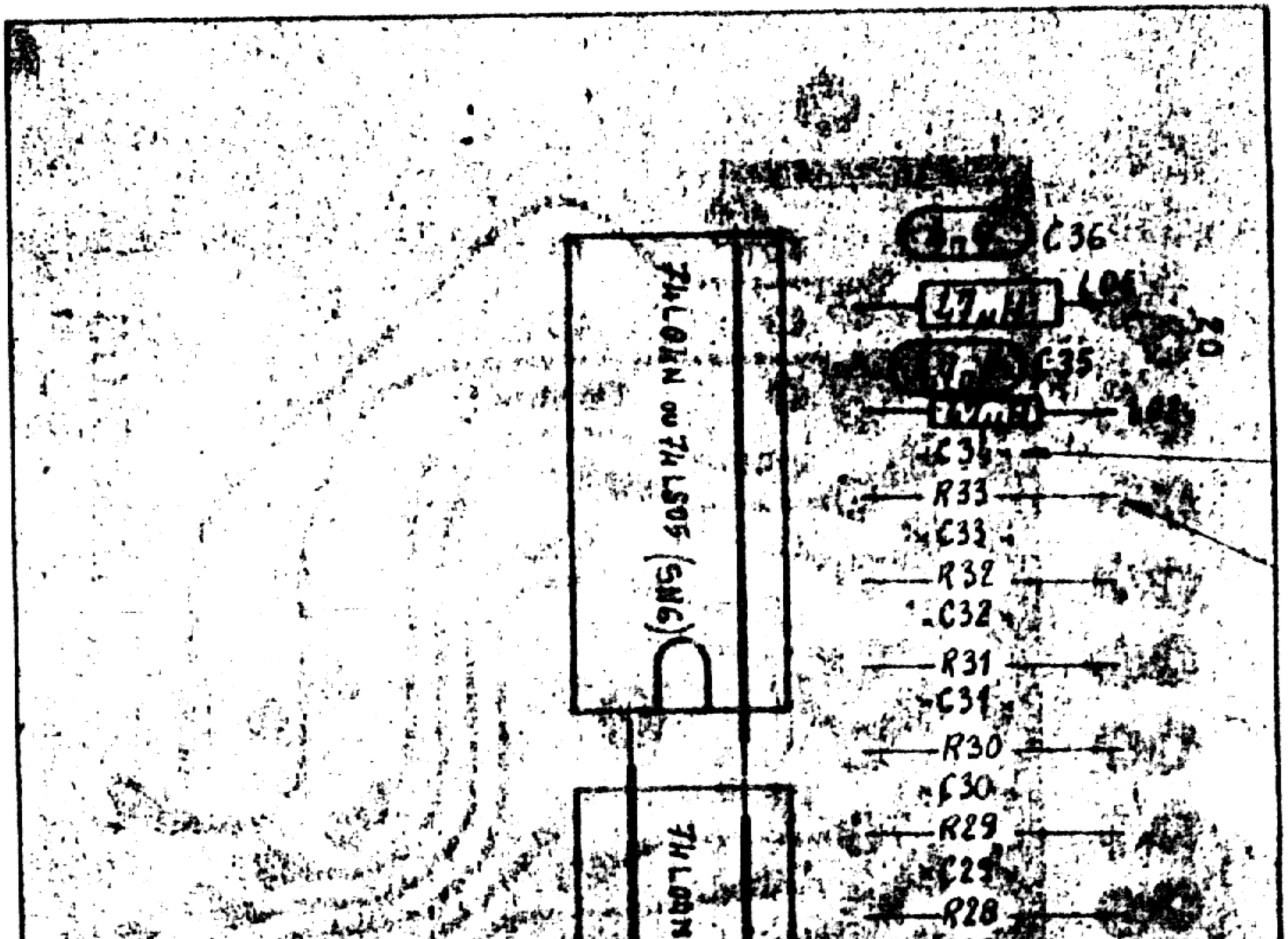
74LS04N or 74LS05 (SN6)
74LS04N
C36
47uH
L06
C35
C34
R33
C33
R32
C32
R31
C31
R30
C30
R29
C29
R28

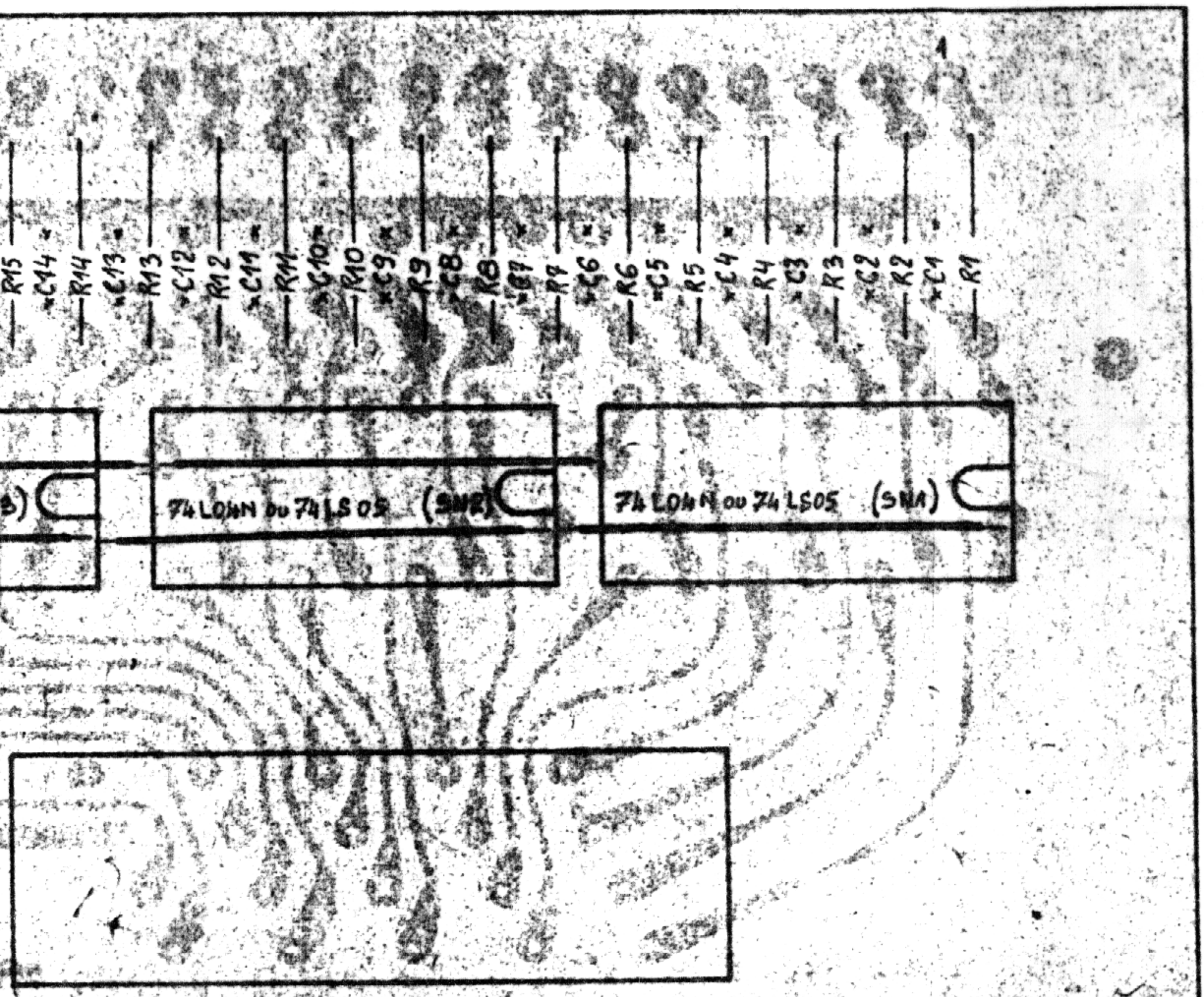

WIRING AND COMPONENT LAYOUT
DIAGRAM N° 931318 D

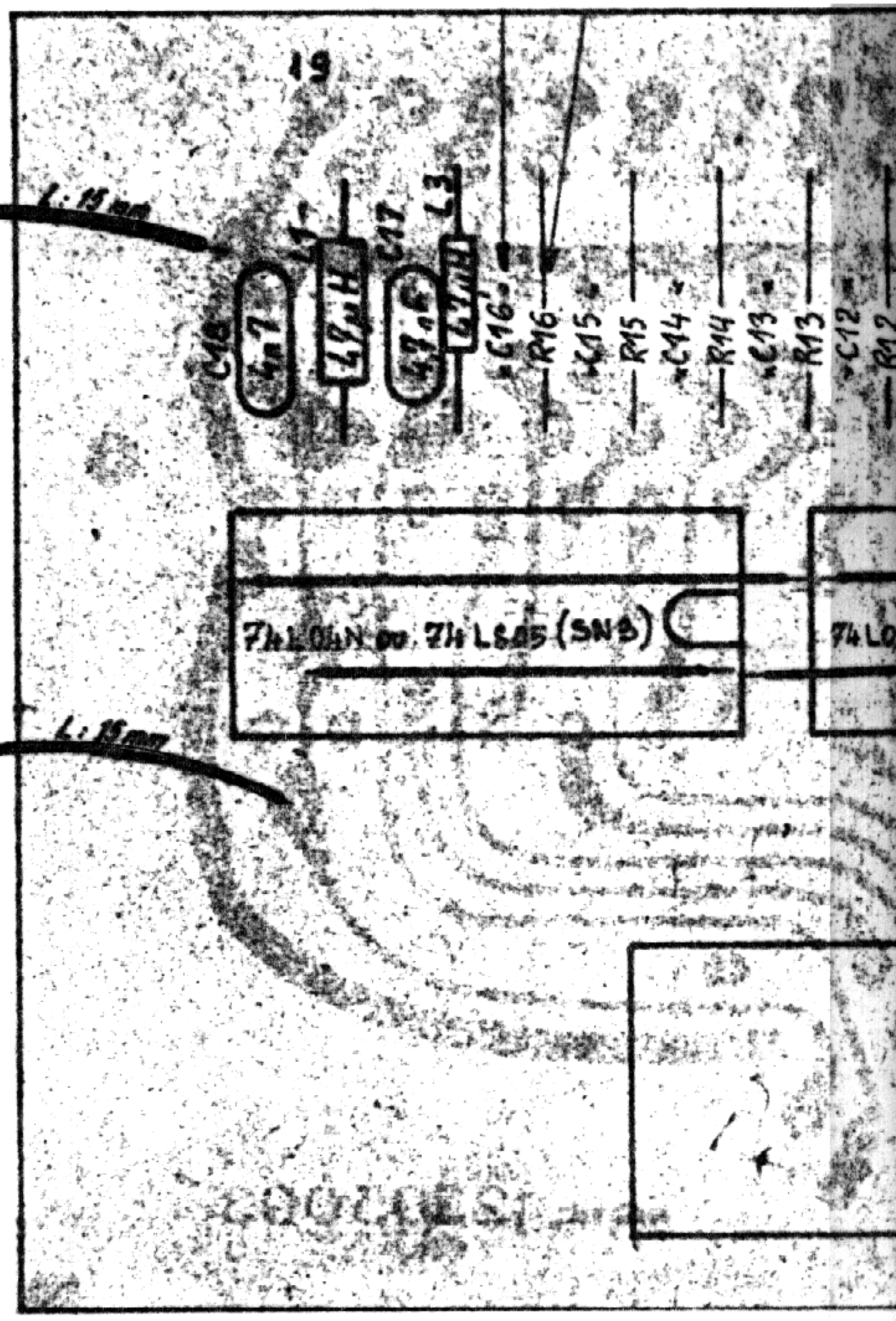
19
to A
See 931319C
to B
See 931319C
C18
4n7
L1
47µH
C17
47n
L3
47µH
C16
R16
C15
R15
C14
R14
C13
R13
C12
R12
74LS04N or 74LS05 (SN5)
74LS
BUCHAREST

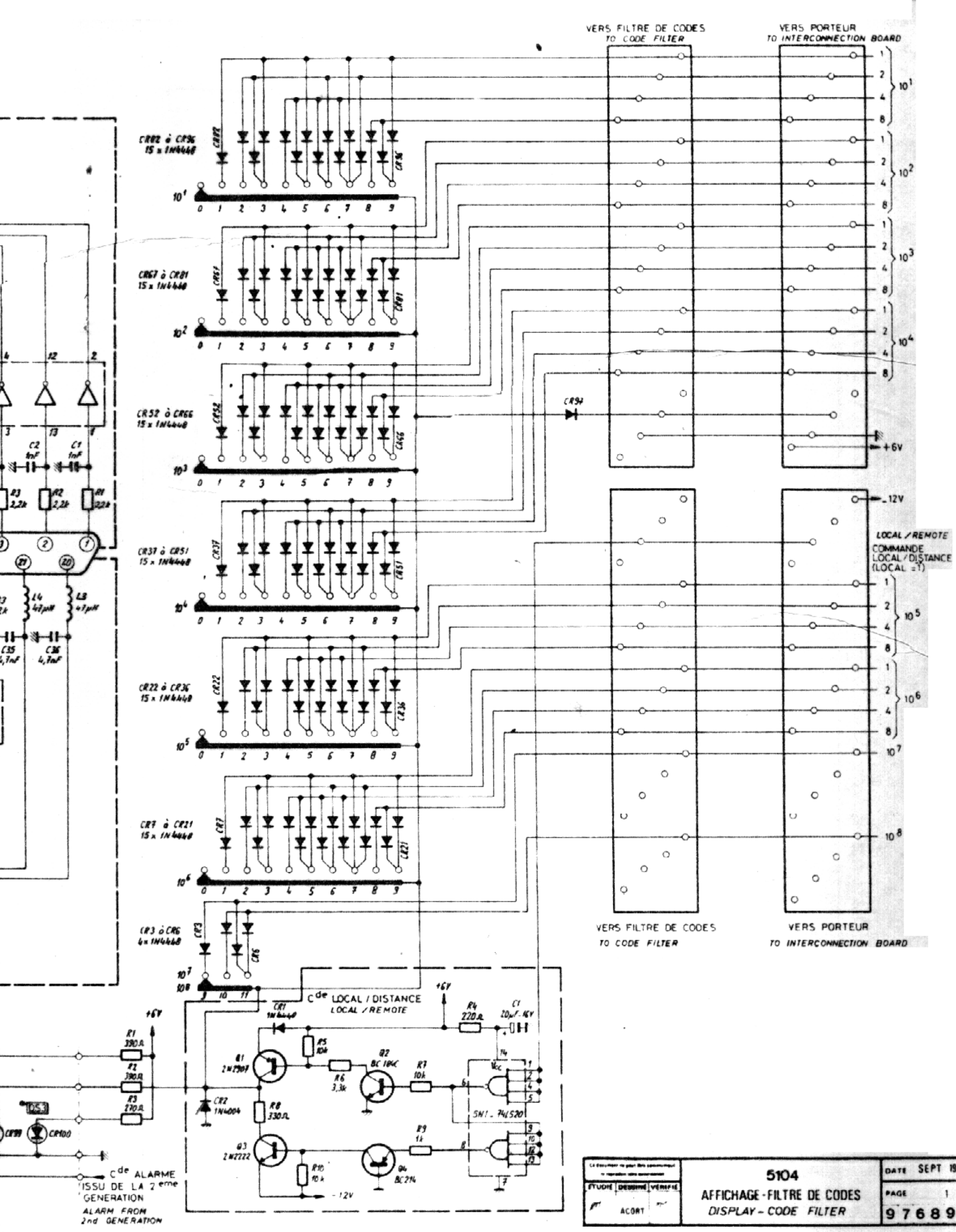

ÉTUDIÉ	DESSINÉ	VÉRIFIÉ	5104
	ACORT		AFFICHAGE - FILTRE DE CODES DISPLAY - CODE FILTER

DATE SEPT 1976
PAGE 1 1
976895

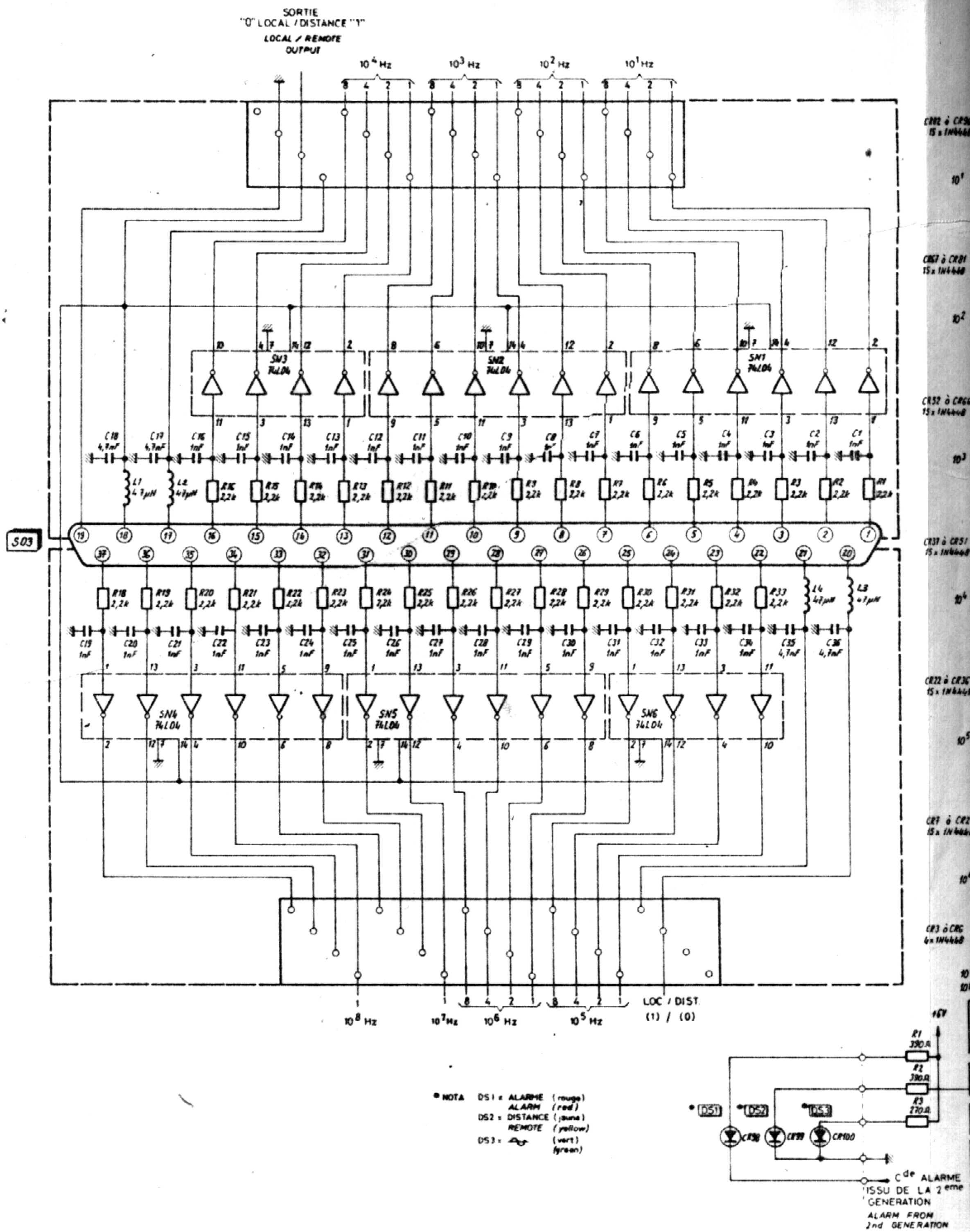
SORTIE
"0" LOCAL / DISTANCE "1"
LOCAL / REMOTE
OUTPUT
10^4 Hz
10^3 Hz
10^2 Hz
10^1 Hz
SN3
74L04
SN2
74L04
SN1
74L04
SO3
SN4
74L04
SN5
74L04
SN6
74L04
10^8 Hz
10^7 Hz
10^6 Hz
10^5 Hz
LOC / DIST
(1) / (0)
+6V
R1
390Ω
R2
390Ω
R3
270Ω
DS1
DS2
DS3
CR98
CR99
CR100
C de ALARME
ISSU DE LA 2 eme
GENERATION
ALARM FROM
2nd GENERATION
• NOTA
DS1 : ALARME (rouge)
ALARM (red)
DS2 : DISTANCE (jaune)
REMOTE (yellow)
DS3 : (vert)
(green)

CHAPTER VI

ELECTRICAL DIAGRAMS

N° d'ESSAI appareils utilisés	CONDITIONS	SANCTIONS
	b) Non harmonic signals	
	- All the non-harmonic signals, except those corresponding to the network frequency, are	<-80 dB
	- Nevertheless, synthesize the 90.1 MHz and 119.1 MHz frequencies on the 5104.	Check that the signals at ± 100 kHz are <-80 dB
	- Synthesize the 90.04 MHz and 119.04 MHz frequencies	Check that the signals at ± 40 kHz are <-80 dB
	c)Phase noise	
ADRET spectrum analyzer Model 6303/6100 Substractive mixer ECF 59 5104 reference	- Realize the interface shown in figure VII-7	

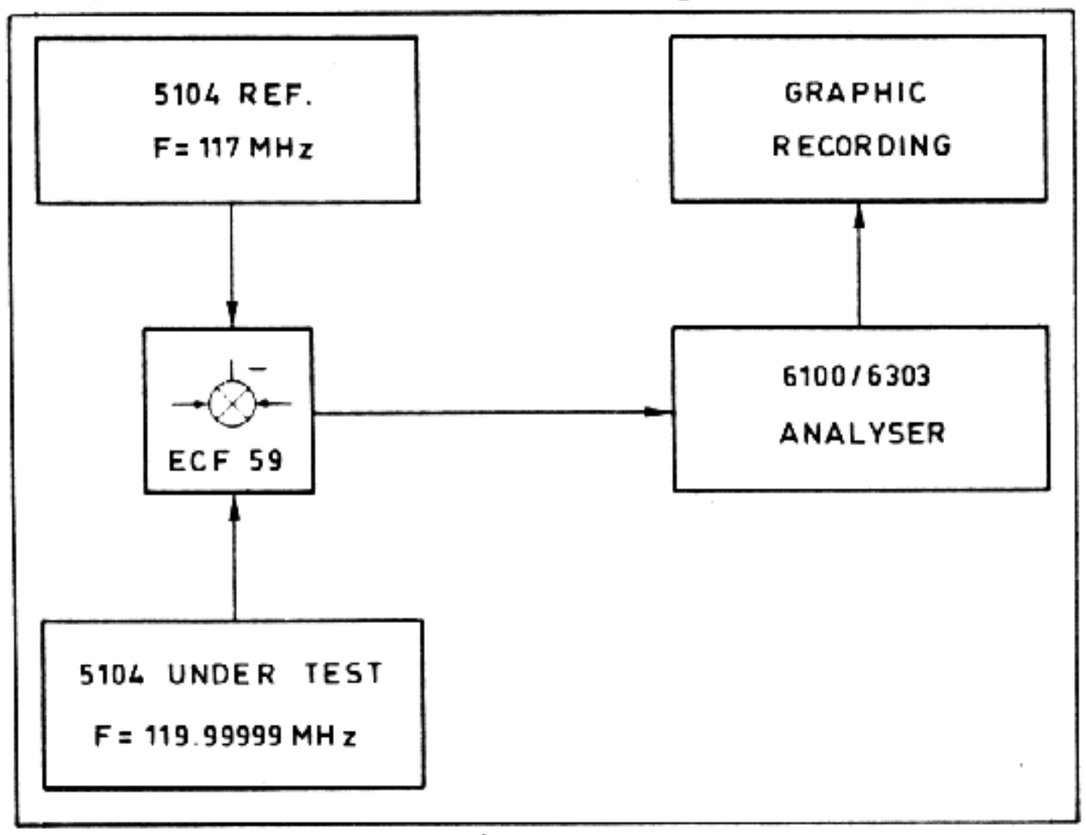

Figure VII-7 - Phase noise measurement

- Proceed to calibration of the "6100/6303 - and-recording table" set/unit	
- Draft a first spectrum with a 100 Hz/div. dispersion Check that the phase noise measured at 300 Hz and 1 kHz is respectively	<-106 dB and <-112 dB
- Draft a second sepctrum with a 1 kHz/div. dispersion Check that the phase noise measured at 10 kHz is	<-120 dB
d) Mains signals	
- Check on both above-mentioned spectra that the signals corresponding to the network frequency are	<-60 dB

N° d'ESSAI appareils utilisés	CONDITIONS	SANCTIONS
	- Phase-lock the frequency meter and the 5104 to the same "standard source" (4101) - Synthesize the 90 MHz frequency, then move each (K01) switch through all its positions	Check that displayed and synthesized frequencies correspond
	- Check that the "Alarm" voltage obtained after a frequency variation is Refer to figure VII-6 for the localization of the control point	> 3 V

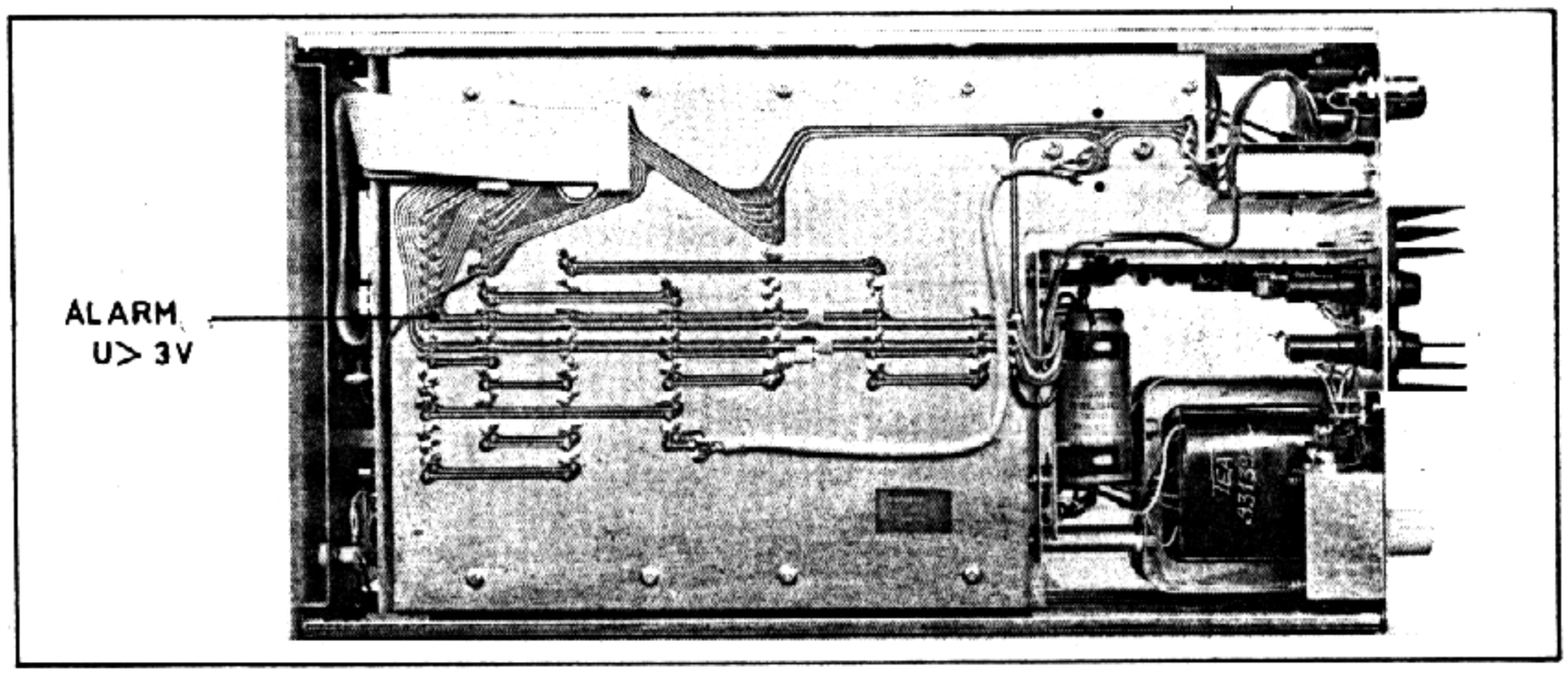

Figure VII-6 - Alarm voltage measurement

ECF 134 + 5104 special head (frequency programmer)	b) Remonte Mode - Connect the programmer to the (S03) "FREQUENCY PROGRAMMING" connector of the 5104.	
	- Send an "0" logic level (0 V to + 0.7 V/0.2 mA) on pin 20 of (S03). - Program the 90 MHz frequency, then all the codes corresponding to the different steps.	The DS02 "remote" pilot light must be switched on check that displayed and synthesized frequencies correspond.
VI	OUTPUT LEVEL - Connect the voltmeter to the (J01) output of the 5104, through a 50 Ω load.	Check that the measured output level is + 13 dBm ± 1 dB
VII Spectrum analyzer	SPECTRAL PURITY - Connect the spectrum analyzer to the (J01) output of the 5104 through a 50 Ω load.	
	a) Harmonic signals - Synthesize different frequencies between 90 MHz and 120 MHz	Check that the harmonic signals are <-26 dB

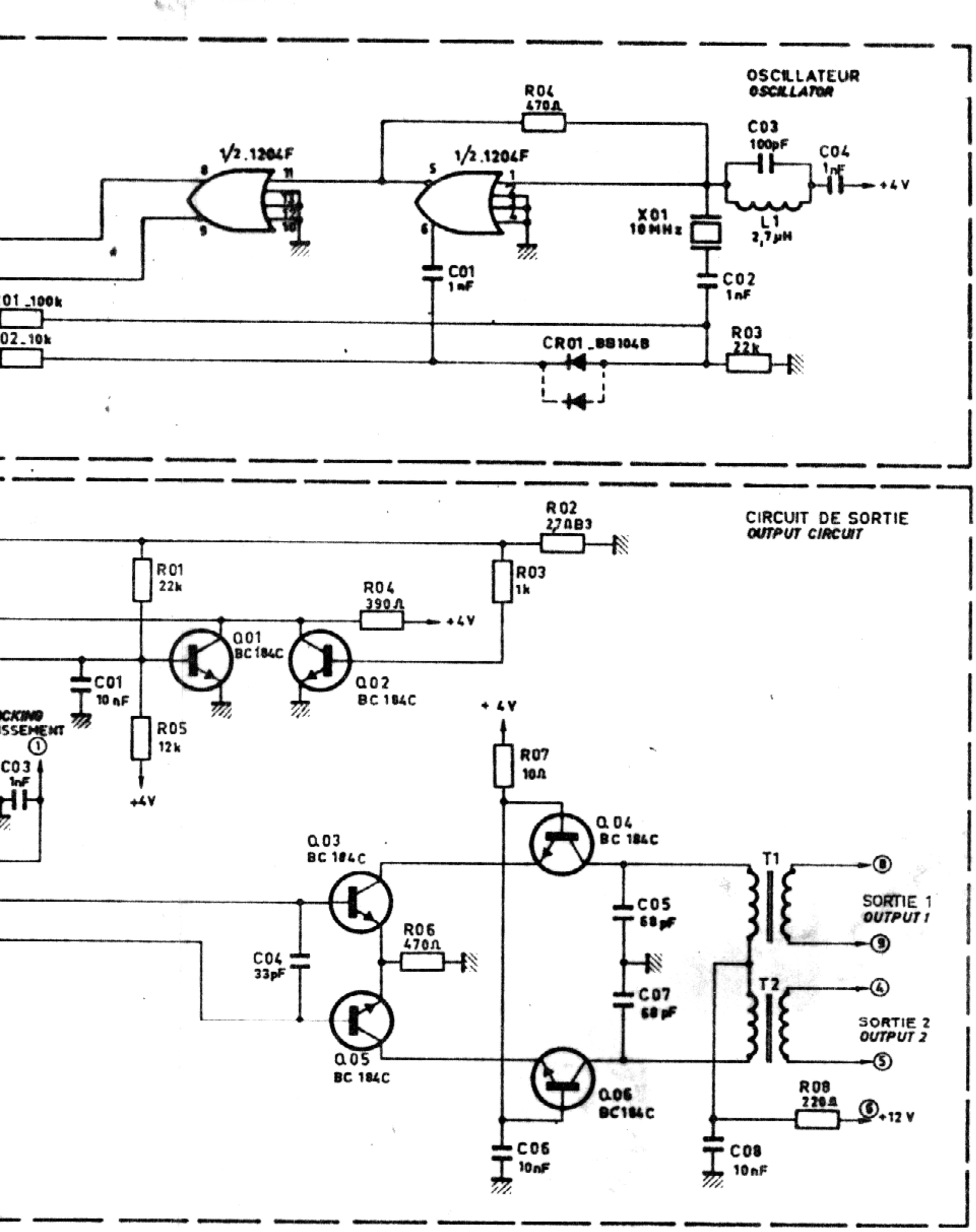

			electronique	DATE : JUIN 1975
ÉTUDIÉ	DESSINÉ	VÉRIFIÉ	PILOTE 623	PAGE : 1/1
	ACORT		623 MASTER OSCILLATOR	0 2 0 0 2 2

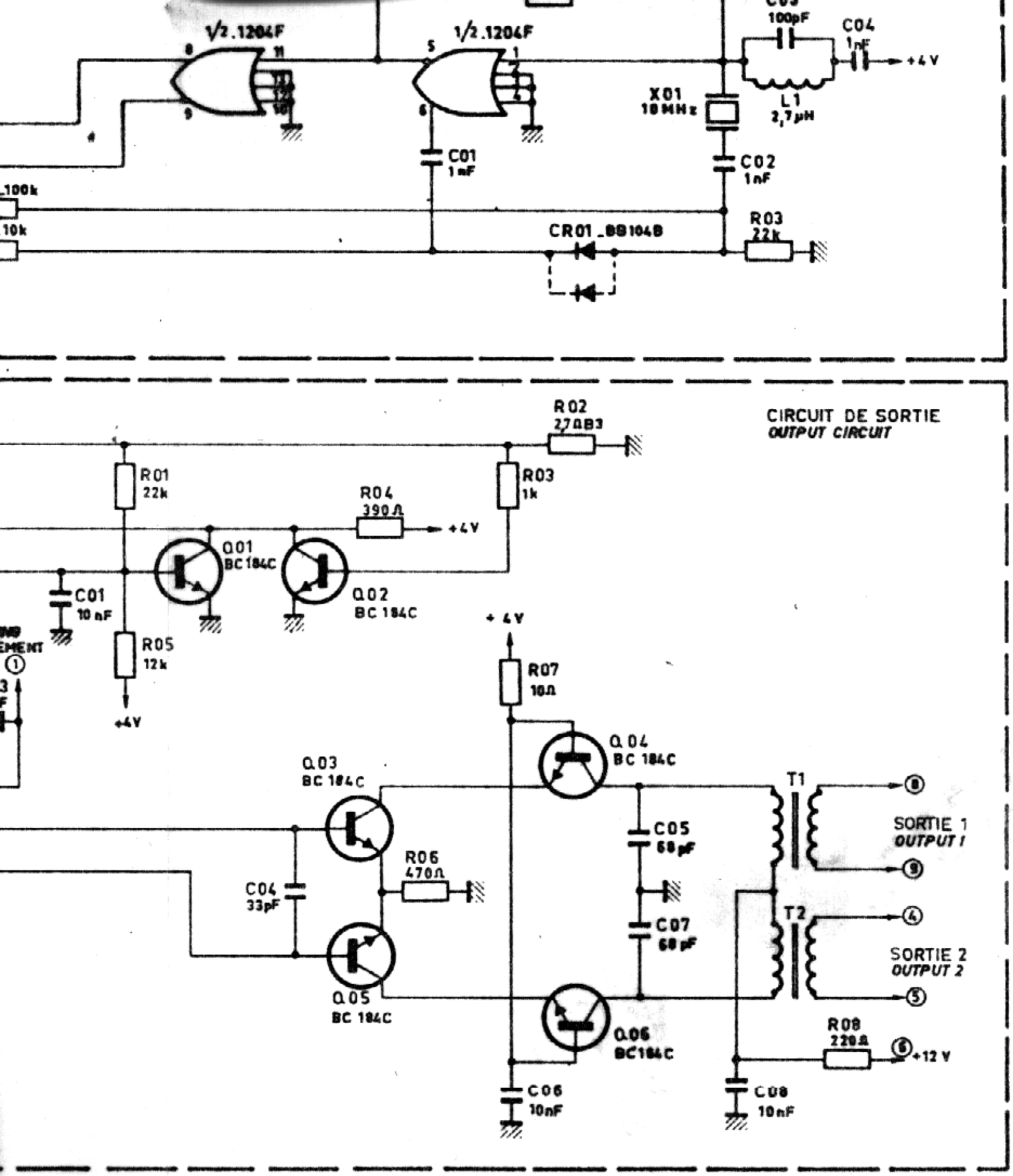

Ce document ne peut être communiqué ni reproduit sans autorisation			adrat electronique	DATE : JUIN 1975
ÉTUDIÉ	DESSINÉ	VERIFIÉ	PILOTE 623	PAGE : 1/1
	ACORT		623 MASTER OSCILLATOR	979977

REPERES	REFERENCE ADRET	DESIGNATION	REFERENCE FABRICANT
RESISTANCES *RESISTORS*			
R45	22100110	100 5 % 1/4 W	S07 SOVCOR
R46	22100122	220 5 % 1/4 W	S07 SOVCOR
R47	22100212	1,2 k 5 % 1/4 W	S07 SOVCOR
CONDENSATEURS *CAPACITORS*			
C01	31500310	10 nF 63 V + 50-20 %	GOX 767 14 L.C.C.
C02	37001500	22 µF 16 V + 50-20 %	GP Marquage clair I.T.T.
C03	31500310	10 nF 63 V + 50-20 %	GOX 767 14 L.C.C.
C04	37001500	22 µF 16 V + 50-20 %	GP Marquage clair I.T.T.
C05	31200082	82 pF 100 V 2 %	C333 CB/C 82E COGECO
C06	31200133	330 pF 100 V 2 %	C333 CH/C 330E COGECO
C07	31200082	82 pF 100 V 2 %	C333 CB/C 82E COGECO
C08	31200056	56 pF 100 V 2 %	C333 CB/C 56E COGECO
C09	37001500	22 µF 16 V + 50-20 %	GP Marquage clair I.T.T.
C10	31200082	82 pF 100 V 2 %	C333 CB/C 82E COGECO
C11	31200056	56 pF 100 V 2 %	C333 CB/C 56E COGECO
C12	31200133	330 pF 100 V 2 %	C333 CB/C 56E COGECO
C13	31200133	330 pF 100 V 2 %	C333 CB/C 56E COGECO
C14	31500310	10 nF 63 V + 50-20 %	GOX 767 14 L.C.C.
C15	31200110	100 pF 100 V 2 %	C333 CH/C 100E COGECO
C16	31200110	100 pF 100 V 2 %	C333 CH/C 100E COGECO
C17	31200110	100 pF 100 V 2 %	C333 CH/C 100E COGECO
C18	31500310	10 nF 63 V + 50-20 %	GOX 767 14 L.C.C.
C19	31500310	10 nF 63 V + 50-20 %	GOX 767 14 L.C.C.
C20	31200047	47 pF 100 V 2 %	C333 CB/C 47E COGECO
C21	37001500	22 µF 16 V + 50-20 %	GP Marquage clair I.T.T.
C22			
C23	37001500	22 µF 16 V + 50-20 %	GP Marquage clair I.T.T.
C24	31500310	10 nF 63 V + 50-20 %	GP Marquage clair I.T.T.
C25	31200210	1 nF 100 V 10 %	C332 CA/A 1K COGECO
C26	37000400	1 µF 35 V 20 %	PAIF TAS 1 L.T.T.
C27	32004800	33 nF 100 V 10 %	C280 AE/A 330 k COGECO
C28	31200210	1 nF 100 V 10 %	C332 CA/A 1K COGECO
C29	31200033	33 pF 100 V 2 %	C333 CB/C 33E COGECO
C30	37001500	22 µF 16 V + 50-20 %	GP Marquage clair I.T.T.
C31	31200210	1 nF 100 V 10 %	C332 CA/A 1K COGECO
C32	31200068	68 pF 100 V 2 %	C333 CB/C 68E COGECO
C33	31200°68	68 pF 100 V 2 %	C333 CB/C 68E COGECO
CV1	36000500	1,8/10 pF 100 V 2 %	R.T.C.

REPERES	REFERENCE ADRET	DESIGNATION	REFERENCE FABRICANT
RESISTANCES *RESISTORS*			
R01	22100082	82 5 % 1/4 W	S07 SOVCOR
R02	22100215	1,5 k 5 % 1/4 W	S07 SOVCOR
R03	22100315	15 k 5 % 1/4 W	S07 SOVCOR
R04	22100222	2,2 k 5 % 1/4 W	S07 SOVCOR
R05	22100118	180 5 % 1/4 W	S07 SOVCOR
R06	22100118	180 5 % 1/4 W	S07 SOVCOR
R07	22100110	100 5 % 1/4 W	S07 SOVCOR
R08	22100215	1,5 k 5 % 1/4 W	S07 SOVCOR
R09	22100315	15 k 5 % 1/4 W	S07 SOVCOR
R10	22100222	2,2 k 5 % 1/4 W	S07 SOVCOR
R11	22100156	560 5 % 1/4 W	S07 SOVCOR
R12	22100210	1 k 5 % 1/4 W	S07 SOVCOR
R13	22100082	82 5 % 1/4 W	S07 SOVCOR
R14	22100147	470 5 % 1/4 W	S07 SOVCOR
R15	22100227	2,7 k 5 % 1/4 W	S07 SOVCOR
R16	22100115	150 5 % 1/4 W	S07 SOVCOR
R17	22100115	150 5 % 1/4 W	S07 SOVCOR
R18	22100118	180 5 % 1/4 W	S07 SOVCOR
R19	22100233	3,3 k 5 % 1/4 W	S07 SOVCOR
R20	22100118	180 5 % 1/4 W	S07 SOVCOR
R21	22100233	3,3 k 5 % 1/4 W	S07 SOVCOR
R22	22100147	470 5 % 1/4 W	S07 SOVCOR
R23	22100222	2,2 k 5 % 1/4 W	S07 SOVCOR
R24	22100322	22 k 5 % 1/4 W	S07 SOVCOR
R25	22100133	330 5 % 1/4 W	S07 SOVCOR
R26	22100168	680 5 % 1/4 W	S07 SOVCOR
R27	22100139	390 5 % 1/4 W	S07 SOVCOR
R28	22100110	100 5 % 1/4 W	S07 SOVCOR
R29	22100233	3,3 k 5 % 1/4 W	S07 SOVCOR
R30	22100147	470 5 % 1/4 W	S07 SOVCOR
R31	22100233	3,3 k 5 % 1/4 W	S07 SOVCOR
R32	22100233	3,3 k 5 % 1/4 W	S07 SOVCOR
R33	22100233	3,3 k 5 % 1/4 W	S07 SOVCOR
R34	22100233	3,3 k 5 % 1/4 W	S07 SOVCOR
R35	22100210	1 k 5 % 1/4 W	S07 SOVCOR
R36	22100122	220 5 % 1/4 W	S07 SOVCOR
R37	22100247	4,7 k 5 % 1/4 W	S07 SOVCOR
R38	22100110	100 5 % 1/4 W	S07 SOVCOR
R39	22100327	27 k 5 % 1/4 W	S07 SOVCOR
R40	22100239	3,9 k 5 % 1/4 W	S07 SOVCOR
R41	22100318	18 k 5 % 1/4 W	S07 SOVCOR
R42	22100210	1 k 5 % 1/4 W	S07 SOVCOR
R43	22100210	1 k 5 % 1/4 W	S07 SOVCOR
R44	22100215	1,5 k 5 % 1/4 W	S07 SOVCOR

REPERES	REFERENCE ADRET	DESIGNATION	REFERENCE FABRICANT
TRANSISTORS			
Q01	43001100	BC 214	TEXAS INSTRUMENTS
Q02	43002200	BF 272	S.G.S.
Q03	43000400	2N 918	I.T.T.
Q04	43000400	2N 918	I.T.T.
Q05	43000500	2N 2369	MOTOROLA
Q06	43000700	2N 2894	MOTOROLA
Q07	43001900	BC 184C	TEXAS INSTRUMENTS
CIRCUITS INTEGRES *INTEGRATED CIRCUITS*			
SN01	41507404	74 LS04	TEXAS INSTRUMENTS
SN02	41574122	74 LS122	TEXAS INSTRUMENTS
SN03	41507400	74 LS00	TEXAS INSTRUMENTS
SN04	41507473	74 LS73	TEXAS INSTRUMENTS
SN05	41507490	74 LS90	TEXAS INSTRUMENTS
SN06	41507490	74 LS90	TEXAS INSTRUMENTS
SN07	41507490	74 LS90	TEXAS INSTRUMENTS
SN08	41507495	74 LS90	TEXAS INSTRUMENTS
SN09	41507451	74 LS51	TEXAS INSTRUMENTS
SN10	41507473	74 LS73	TEXAS INSTRUMENTS
SN11	41507420	74 LS20	TEXAS INSTRUMENTS
SN12	41574136	74 LS136	TEXAS INSTRUMENTS
SN13	41507490	74 LS90	TEXAS INSTRUMENTS
SN14	41574136	74 LS136	TEXAS INSTRUMENTS
CONNECTEUR *CONNECTOR*			
	14310013	31 Points (mâle)	TRELEC

REPERES	REFERENCE ADRET	DESIGNATION	REFERENCE FABRICANT
CONDENSATEURS *CAPACITORS*			
C07	37001500	22 µF 16 V + 50-20 %	GP Marquage clair I.T.T.
C08	31200033	33 pF 100 V 2 %	C333 CB/C 33E COGECO
C09	31200210	1 nF 100 V 10 %	C332 CA/A 1K COGECO
C10	32323300	3,3 nF 400 V 10 %	2211-347-15-332-RTC
C11	32005200	47 nF 100 V 10 %	C280 AE/A 47K COGECO
C12	370015	22 µF 16 V + 50-20 %	GP Marquage clair I.T.T.
C13	370015	22 µF 16 V + 50-20 %	GP Marquage clair I.T.T.
C14	37001500	22 µF 16 V + 50-20 %	GP Marquage clair I.T.T.
C15	31200210	1 nF 100 V 10 %	C332 CA/A 1K COGECO
C16	37001500	22 µF 16 V + 50-20 %	GP Marquage clair I.T.T.
C17	37001500	22 µF 16 V + 50-20 %	GP Marquage clair I.T.T.
C18	37001500	22 µF 16 V + 50-20 %	GP Marquage clair I.T.T.
C19			
C20	31200110	100 pF 100 V 2 %	C333 CH/C 100E COGECO
C21	37001500	22 µF 16 V + 50-20 %	GP Marquage clair I.T.T.
C22	32006500	0,1 µF 250 V 10 %	C280 AE/A 100K COGECO
BOBINAGES *COILS*			
T01	02159100	Néosid F10B	ADRET ELECTRONIQUE
T02	02177000	Néosid F10	ADRET ELECTRONIQUE
T03	02177100	Néosid F10	ADRET ELECTRONIQUE
T04	02177200	Néosid F10	ADRET ELECTRONIQUE
DIODES			
CR01	45002600	BB 109	SESCOSEM
CR02	45002600	BB 109	SESCOSEM
CR03	45002600	BB 109	SESCOSEM
CR04	45002600	BB 109	SESCOSEM
CR05	45003100	1N 4448	I.T.T.
CR06	45003100	1N 4448	I.T.T.
CR07	45003100	1N 4448	I.T.T.
CR08	45003100	1N 4448	I.T.T.
CR09	45003100	1N 4448	I.T.T.
CR10	45003100	1N 4448	I.T.T.

REPERES	REFERENCE ADRET	DESIGNATION	REFERENCE FABRICANT
RESISTANCES *RESISTORS*			
R01	22100222	2,2 k 5 % 1/4 W	S07 SOVCOR
R02	22100222	2,2 k 5 % 1/4 W	S07 SOVCOR
R03	22100112	120 5 % 1/4 W	S07 SOVCOR
R04	22100215	1,5 k 5 % 1/4 W	S07 SOVCOR
R05	22100239	3,9 k 5 % 1/4 W	S07 SOVCOR
R06	22100318	18 k 5 % 1/4 W	S07 SOVCOR
R07	22100327	27 k 5 % 1/4 W	S07 SOVCOR
R08	22100256	5,6 k 5 % 1/4 W	S07 SOVCOR
R09	22100247	4,7 k 5 % 1/4 W	S07 SOVCOR
R10	22100133	330 5 % 1/4 W	S07 SOVCOR
R11	22100139	390 5 % 1/4 W	S07 SOVCOR
R12	22100168	680 5 % 1/4 W	S07 SOVCOR
R13	22100347	47 k 5 % 1/4 W	S07 SOVCOR
R14	22100233	3,3 k 5 % 1/4 W	S07 SOVCOR
R15	22100233	3,3 k 5 % 1/4 W	S07 SOVCOR
R16	22100122	220 5 % 1/4 W	S07 SOVCOR
R17	22100122	220 5 % 1/4 W	S07 SOVCOR
R18	22100082	82 5 % 1/4 W	S07 SOVCOR
R19	22100147	470 5 % 1/4 W	S07 SOVCOR
R20	22100215	1,5 k 5 % 1/4 W	S07 SOVCOR
R21	22100315	15 k 5 % 1/4 W	S07 SOVCOR
R22	22100222	2,2 k 5 % 1/4 W	S07 SOVCOR
R23	22100222	2,2 k 5 % 1/4 W	S07 SOVCOR
R24	22100047	47 5 % 1/4 W	S07 SOVCOR
R25	22100022	22 5 % 1/4 W	S07 SOVCOR
R26	22100222	2,2 k 5 % 1/4 W	S07 SOVCOR
R27	22100222	2,2 k 5 % 1/4 W	S07 SOVCOR
R28	22100310	10 k 5 % 1/4 W	S07 SOVCOR
R29	22100115	150 5 % 1/4 W	S07 SOVCOR
R30	22100210	1 k 5 % 1/4 W	S07 SOVCOR
R31	22100347	47 k 5 % 1/4 W	S07 SOVCOR
R32	22100122	220 5 % 1/4 W	S07 SOVCOR
R33	22100139	390 5 % 1/4 W	S07 SOVCOR
CONDENSATEURS *CAPACITORS*			
C01	31200056	56 pF 100 V 2 %	C333 CB/C 56E COGECO
C02			
C03	31200010	10 nF 100 V 2 %	C333 CB/C 10E COGECO
C04	31200015	15 pF 100 V 2 %	C333 CB/C 10E COGECO
C05			
C06	31200210	1 nF 100 V 10 %	C332 CA/A 1K COGECO

REPERES	REFERENCE ADRET	DESIGNATION	REFERENCE FABRICANT
CIRCUITS INTEGRES *INTEGRATED CIRCUITS*			
SN14	41507473	74 LS73	TEXAS INSTRUMENTS
SN15	41107412	7412	TEXAS INSTRUMENTS
M01	42001100	TBA 673	R.T.C.
CONNECTEUR *CONNECTOR*			
	14350046	TM 35 points (Mâle)	TRELEC

REPERES	REFERENCE ADRET	DESIGNATION	REFERENCE FABRICANT
BOBINAGES *COILS*			
T07	02167500	Néosid F10	ADRET ELECTRONIQUE
T08	02167500	Néosid F10	ADRET ELECTRONIQUE
T09	02148700	Néosid F10B	ADRET ELECTRONIQUE
DIODES			
CR01	45002100	BB 104B	R.T.C.
CR02	45002100	BB 104B	R.T.C.
CR03	45003100	1N 4448	I.T.T.
CR04	45003100	1N 4448	I.T.T.
CR05	45003100	1N 4448	I.T.T.
CR06	45003100	1N 4448	I.T.T.
CR07	45003100	1N 4448	I.T.T.
CR08	45003100	1N 4448	I.T.T.
TRANSISTORS			
Q01	43001100	BC 214C	TEXAS INSTRUMENTS
Q02	43000500	2N 2369	MOTOROLA
Q03	43001900	BC 184C	TEXAS INSTRUMENTS
Q04	43001900	BC 184C	TEXAS INSTRUMENTS
Q05	43002200	BF 272	S.G.S.
Q06	43000400	2N 918	I.T.T.
Q07	43000400	2N 918	I.T.T.
CIRCUITS INTEGRES *INTEGRATED CIRCUITS*			
SN01	41507490	74 LS90	TEXAS INSTRUMENTS
SN02	41507400	74 LS00	TEXAS INSTRUMENTS
SN03	41507473	74 LS73	TEXAS INSTRUMENTS
SN04	41507400	74 LS00	TEXAS INSTRUMENTS
SN05	41507490	74 LS90	TEXAS INSTRUMENTS
SN06	41507473	74 LS73	TEXAS INSTRUMENTS
SN07	41507495	74 LS95	TEXAS INSTRUMENTS
SN08	41507490	74 LS90	TEXAS INSTRUMENTS
SN09	41574136	74 LS136	TEXAS INSTRUMENTS
SN10	41507490	74 LS90	TEXAS INSTRUMENTS
SN11	41574136	74 LS136	TEXAS INSTRUMENTS
SN12	41507490	74 LS90	TEXAS INSTRUMENTS
SN13	4157136	74 LS136	TEXAS INSTRUMENTS

REPERES	REFERENCE ADRET	DESIGNATION	REFERENCE FABRICANT
CONDENSATEURS *CAPACITORS*			
C04	32002900	10 nF 160 V 10 %	C280 AE/A 10K COGECO
C05	31200056	56 pF 100 V 2 %	C333 CB/C 56E COGECO
C06			
C07	31200056	56 pF 100 V 2 %	C333 CB/C 56E COGECO
C08			
C09	37001500	22 µF 16 V + 50-20 %	GP Marquage clair I.T.T.
C10	31200968	6,8 pF 100 V ± 0,25 pF	C333 CB/N 6E8 COGECO
C11	31200082	82 pF 100 V ± 2 %	C333 CB/C 82E COGECO
C12			
C13	31200956	5,6 pF 100 V ± 0,25 pF	C333 CB/N 5E6 COGECO
C14	31200082	82 pF 100 V 2 %	C333 CB/C 82E COGECO
C15			
C16	31200956	5,6 pF 100 V ± 0,25 pF	C333 CB/N 5E6 COGECO
C17	31200082	82 pF 100 V 2 %	C333 CB/C 82E COGECO
C18			
C19	31200968	6,8 pF 100 V ± 0,25 pF	C333 CB/N 6E8 COGECO
C20	31200082	82 pF 100 V 2 %	C333 CB/C 82E COGECO
C21			
C22	31200033	33 pF 100 V 2 %	C333 CB/C 33E COGECO
C23	37001500	22 µF 16 V + 50-20 %	GP Marquage clair I.T.T.
C24	31200210	1 nF 100 V 10 %	C332 CA/A 1K COGECO
C25	32007200	0,1 µF 40 V 5 %	
C26	37000400	1 µF 35 V 20 %	PAIF TAS 1 L.T.T.
C27	37001500	22 µF 16 V + 50-20 %	GP Marquage clair I.T.T.
C28	37001500	22 µF 16 V + 50-20 %	GP Marquage clair I.T.T.
C29	31200022	22 pF 100 V 2 %	C333 CB/C 22E COGECO
C30	37001500	22 µF 16 V + 50-20 %	GP Marquage clair I.T.T.
C31	37001500	22 µF 16 V + 50-20 %	GP Marquage clair I.T.T.
C32	31200210	1 nF 100 V 10 %	C332 CA/A 1K COGECO
C33	37001500	22 µF 16 V + 50-20 %	GP Marquage clair I.T.T.
C34	37001500	22 µF 16 V + 50-20 %	GP Marquage clair I.T.T.
C35	37001500	22 µF 16 V + 50-20 %	GP Marquage clair I.T.T.
C36	37001500	22 µF 16 V + 50-20 %	GP Marquage clair I.T.T.
BOBINAGES *COILS*			
T01	02135600	Néosid F10B	ADRET ELECTRONIQUE
T02	02101400	Néosid F2	ADRET ELECTRONIQUE
T03	02162800	Néosid F2	ADRET ELECTRONIQUE
T04	02176800	Néosid F2	ADRET ELECTRONIQUE
T05	02176900	Néosid F10	ADRET ELECTRONIQUE
T06	02167500	Néosid F10	ADRET ELECTRONIQUE

REPERES	REFERENCE ADRET	DESIGNATION	REFERENCE FABRICANT
RESISTANCES *RESISTORS*			
R01			
R02	22100122	220 5 % 1/4 W	S07 SOVCOR
R03	22100215	1,5 k 5 % 1/4 W	S07 SOVCOR
R04	22100168	680 5 % 1/4 W	S07 SOVCOR
R05	22100215	1,5 k 5 % 1/4 W	S07 SOVCOR
R06	22100068	68 5 % 1/4 W	S07 SOVCOR
R07	22100068	68 5 % 1/4 W	S07 SOVCOR
R08	22100310	10 k 5 % 1/4 W	S07 SOVCOR
R09	22100110	100 5 % 1/4 W	S07 SOVCOR
R10	22100110	110 5 % 1/4 W	S07 SOVCOR
R11	22100227	2,7 k 5 % 1/4 W	S07 SOVCOR
R12	22100268	6,8 k 5 % 1/4 W	S07 SOVCOR
R13	22100068	68 5 % 1/4 W	S07 SOVCOR
R14	22100215	1,5 k 5 % 1/4 W	S07 SOVCOR
R15	22100310	10 k 5 % 1/4 W	S07 SOVCOR
R16	22100210	1 k 5 % 1/4 W	S07 SOVCOR
R17	22100210	1 k 5 % 1/4 W	S07 SOVCOR
R18	22100247	4,7 k 5 % 1/4 W	S07 SOVCOR
R19	22100068	68 5 % 1/4 W	S07 SOVCOR
R20	22100256	5,6 k 5 % 1/4 W	S07 SOVCOR
R21	22100122	220 5 % 1/4 W	S07 SOVCOR
R22	22100133	330 5 % 1/4 W	S07 SOVCOR
R23	22100122	220 5 % 1/4 W	S07 SOVCOR
R24	22100233	3,3 k 5 % 1/4 W	S07 SOVCOR
R25	22100322	22 k 5 % 1/4 W	S07 SOVCOR
R26	22100018	18 5 % 1/4 W	S07 SOVCOR
R27	22100168	680 5 % 1/4 W	S07 SOVCOR
R28	22100139	390 5 % 1/4 W	S07 SOVCOR
R29	22100233	3,3 k 5 % 1/4 W	S07 SOVCOR
R30	22100247	4,7 k 5 % 1/4 W	S07 SOVCOR
R31	22100222	2,2 k 5 % 1/4 W	S07 SOVCOR
R32	22100082	82 5 % 1/4 W	S07 SOVCOR
R33	22100222	2,2 k 5 % 1/4 W	S07 SOVCOR
R34	22100247	4,7 k 5 % 1/4 W	S07 SOVCOR
R35	22100210	1 k 5 % 1/4 W	S07 SOVCOR
R36	22100247	4,7 k 5 % 1/4 W	S07 SOVCOR
CONDENSATEURS *CAPACITORS*			
C01	33000900	250 pF 250 V 2 %	TVE 15C LAFAB
C02	33000900	250 pF 250 V 2 %	TVE 15C LAFAB
C03			

NOMENCLATURE

REPERES	REFERENCE ADRET	DESIGNATION	REFERENCE FABRICANT
BOBINAGES *COILS*			
T01	02177300	Néosid F2	ADRET ELECTRONIQUE
T02	02147800	Néosid F2	ADRET ELECTRONIQUE
T03	02140700	Néosid F2	ADRET ELECTRONIQUE
T04	02147800	Néosid F2	ADRET ELECTRONIQUE
T05	02116000	Néosid F2	ADRET ELECTRONIQUE
T06	02112800	Néosid F10B	ADRET ELECTRONIQUE
T07	02163500	Néosid F10B	ADRET ELECTRONIQUE
T08	02177400	Néosid F10	ADRET ELECTRONIQUE
T09	02135100	Néosid F10B	ADRET ELECTRONIQUE
T10	02177500	Néosid H20	ADRET ELECTRONIQUE
DIODES			
CR01	45003100	1N 4448	I.T.T.
CR02	45003100	1N 4448	I.T.T.
CR03	45003100	1N 4448	I.T.T.
CR04	45003100	1N 4448	I.T.T.
CR05	45003100	1N 4448	I.T.T.
CR06	45003100	1N 4448	I.T.T.
CR07	45002600	BB 109	SESCOSEM
CR08	45002600	BB 109	SESCOSEM
CR09	45002600	BB 109	SESCOSEM
CR10	45002600	BB 109	SESCOSEM
TRANSISTORS			
Q01	43000500	2N 2369	MOTOROLA
Q02	43000700	2N 2894	MOTOROLA
Q03	43000500	2N 2369	MOTOROLA
Q04	43000700	2N 2894	MOTOROLA
Q05	43001900	BC 184C	TEXAS INSTRUMENTS
Q06	43001900	BC 184C	TEXAS INSTRUMENTS
Q07	43002200	BF 272	S.G.S.
Q08	43000400	2N 918	TEXAS INSTRUMENTS
Q09	43000400	2N 918	TEXAS INSTRUMENTS
Q10	43001900	BC 184C	TEXAS INSTRUMENTS
Q11	43001000	2N 2907	TEXAS INSTRUMENTS
Q12	43001100	BC 214C	TEXAS INSTRUMENTS
Q13	43001100	BC 214C	TEXAS INSTRUMENTS

REPERES	REFERENCE ADRET	DESIGNATION	REFERENCE FABRICANT
CIRCUITS INTEGRES *INTEGRATED CIRCUITS*			
SN01	41507490	74 LS90	TEXAS INSTRUMENTS
SN02	41507473	74 LS73	TEXAS INSTRUMENTS
SN03	41507400	74 LS00	TEXAS INSTRUMENTS
SN04	42001100	TBA 673	R.T.C.
SN05	41507404	74 LS04	TEXAS INSTRUMENTS
CONNECTEUR *CONNECTOR*			
	14310013	TM 31 points (mâle)	TRELEC

REPERES	REFERENCE ADRET	DESIGNATION	REFERENCE FABRICANT
CONDENSATEURS *CAPACITORS*			
C14	31200210	1 nF 100 V 10 %	C332 CA/A 1K COGECO
C15	31500310	10 nF 63 V + 50-20 %	GOX 767 14 L.C.C.
C16	31500310	10 nF 63 V + 50-20 %	GOX 767 14 L.C.C.
C17	31200210	1 nF 100 V 10 %	C332 CA/A 1K COGECO
C18	31200033	33 pF 100 V 2 %	C333 CB/C 33E COGECO
C19	31200110	100 pF 100 V 2 %	C333 CH/C 100E COGECO
C20	31200110	100 pF 100 V 2 %	C333 CH/C 100E COGECO
C21	31200110	100 pF 100 V 2 %	C333 CH/C 100E COGECO
C22	31200110	100 pF 100 V 2 %	C333 CH/C 100E COGECO
C23	31200033	33 pF 100 V 2 %	C333 CH/C 100E COGECO
C24	31500310	10 nF 63 V + 50-20%	GOX 767 14 L.C.C.
C40	31200210	1 nF 100 V 10 %	C332 CA/A 1K COGECO
C41	31200210	1 nF 100 V 10 %	C332 CA/A 1K COGECO
BOBINAGES *COILS*			
T03	02167700	Tore H20	ADRET ELECTRONIQUE
T04	02177900	Tore H20	ADRET ELECTRONIQUE
T05	02147900	Néosid F2	ADRET ELECTRONIQUE
T06	02149100	Néosid F10B	ADRET ELECTRONIQUE
T07	02149100	Néosid F10B	ADRET ELECTRONIQUE
T08	02161200	Néosid F2	ADRET ELECTRONIQUE
TRANSISTORS			
Q06	43002000	2N 5179	R.C.A.
Q07	43002000	2N 5179	R.C.A.
Q08	43001900	BC 184C	TEXAS INSTRUMENTS
Q09	43001100	BC 214C	TEXAS INSTRUMENTS
Q10	43001000	2N 2907	TEXAS INSTRUMENTS
Q11	43001900	BC 184C	TEXAS INSTRUMENTS
M	42002700	ML-1	
CONNECTEUR *CONNECTOR*			
	14110014	TM 11 (mâle)	TRELEC

REPERES	REFERENCE ADRET	DESIGNATION	REFERENCE FABRICANT
BOBINAGES *COILS*			
T01	02177800	F 100	ADRET ELECTRONIQUE
T02	02177900	H 20	ADRET ELECTRONIQUE
L01	53000300	4,7 µH 2,5 A 10 %	53801 OREGA
L02	53000300	4,7 µH 2,5 A 10 %	53801 OREGA
DIODES			
CR01	45001300	FD 777	FAIRCHILD
CR02	45002600	BB 109	SESCOSEM
CR03	45002600	BB 109	SESCOSEM
CR04	45002600	BB 109	SESCOSEM
CR05	45002600	BB 109	SESCOSEM
CR06	45002600	BB 109	SESCOSEM
TRANSISTORS			
Q01	43001900	BC 184C	TEXAS INSTRUMENTS
Q02	43001100	BC 214C	TEXAS INSTRUMENTS
Q03	43002000	2N 5179	R.C.A.
Q04	43002000	2N 5179	R.C.A.
Q05	43002500	BFR 90	R.T.C.
		CARTE MELANGEUR *MIXER BOARD*	
RESISTANCES *RESISTORS*			
R20	22100127	270 5 % 1/4 W	S07 SOVCOR
R21	29000033	33 5 % 1/8 W	C3 SOVCOR
R22	29000033	33 5 % 1/8 W	C3 SOVCOR
R23	22100182	820 5 % 1/4 W	S07 SOVCOR
R24	22100127	270 5 % 1/4 W	S07 SOVCOR
R25	29000122	220 5 % 1/8 W	C3 SOVCOR
R26	29000033	33 5 % 1/8 W	C3 SOVCOR
R27	29000039	33 5 % 1/8 W	C3 SOVCOR
R28	22100182	820 5 % 1/4 W	S07 SOVCOR
R29	22100110	100 5 % 1/4 W	S07 SOVCOR
R30	22100233	3,3 k 5 % 1/4 W	S07 SOVCOR
R31	22100233	3,3 k 5 % 1/4 W	S07 SOVCOR
R32	22100233	3,3 k 5 % 1/4 W	S07 SOVCOR

MODULE DE SORTIE
OUTPUT LEVEL

N° 97 6887

REPERES	REFERENCE ADRET	DESIGNATION	REFERENCE FABRICANT
		OSCILLATEUR 87 à 116 MHz *87/116 MHz OSCILLATOR*	
RESISTANCES *RESISTORS*			
R01	22100215	1,5 k 5 % 1/4 W	S07 SOVCOR
R02	22100322	220 k 5 % 1/4 W	S07 SOVCOR
R03	22100310	10 k 5 % 1/4 W	S07 SOVCOR
R04	22100310	10 k 5 % 1/4 W	S07 SOVCOR
R05	22100147	470 5 % 1/4 W	S07 SOVCOR
R06	22100215	1,5 k 5 % 1/4 W	S07 SOVCOR
R07	22100122	220 5 % 1/4 W	S07 SOVCOR
R08	22100222	2,2 k 5 % 1/4 W	S07 SOVCOR
R09	22100247	4,7 k 5 % 1/4 W	S07 SOVCOR
R10	22100327	27 k 5 % 1/4 W	S07 SOVCOR
R11	29000051	51 5 % 1/8 W	C3 SOVCOR
R12	29000110	100 5 % 1/8 W	C3 SOVCOR
R13	22100127	270 5 % 1/4 W	S07 SOVCOR
R14	29000051	51 5 % 1/8 W	C3 SOVCOR
R15	22100122	220 5 % 1/4 W	S07 SOVCOR
R16	22100051	51 5 % 1/4 W	S07 SOVCOR
R17	22100147	470 5 % 1/4 W	S07 SOVCOR
R18	22100147	470 5 % 1/4 W	S07 SOVCOR
R19	22100082	82 5 % 1/4 W	S07 SOVCOR
R59	29000022	22 5 % 1/8 W	C3 SOVCOR
CONDENSATEURS *CAPACITORS*			
C01	31500310	10 nF 63 V + 50-20 %	GOX 767 14 L.C.C.
C02	31200210	1 nF 100 V 10 %	C332 CA/A 1K COGECO
C03	323223300	3,3 nF 400 V ± 10 %	2211-347-15-332-RTC
C04	32006500	0,1 µF 250 V 10 %	C280 AE/A 100K COGECO
C05	31200010	10 pF 100 V 2 %	C333 CB/C 10E COGECO
C06			
C07	31500310	10 nF 63 V + 50-20 %	GOX 767 14 L.C.C.
C08	31500310	10 nF 63 V + 50-20 %	GOX 767 14 L.C.C.
C09	31200110	100 pF 100 V 2 %	C333 CH/C 100E COGECO
C10	31200110	100 pF 100 V 2 %	C333 CH/C 100E COGECO
C11			
C12	31200210	1 nF 100 V 10 %	C332 CA/A 1K COGECO
C13	31500310	10 nF 63 V + 50-20 %	GOX 767 14 L.C.C.

REPERES	REFERENCE ADRET	DESIGNATION	REFERENCE FABRICANT
TRANSISTORS			
Q04	43000500	2N 2369	MOTOROLA
Q05	43000700	2N 2894	MOTOROLA
Q06	43001900	BC 184C	TEXAS INSTRUMENTS
Q07	43000500	2N 2369	MOTOROLA
Q08	43000500	2N 2369	MOTOROLA
Q09	43000400	2N 918	I.T.T.
Q10	43000400	2N 918	I.T.T.
Q11	43000500	2N 2369	MOTOROLA
CIRCUITS INTEGRES *INTEGRATED CIRCUITS*			
SN01	41507473	74 LS73	TEXAS INSTRUMENTS
SN02	41507490	74 LS90	TEXAS INSTRUMENTS
SN03	41507410	74 LS10	TEXAS INSTRUMENTS
SN04	41574122	74 LS122	TEXAS INSTRUMENTS
SN05	41005400	SP 640B	PLESSEY
SN06	41174162	74162N	TEXAS INSTRUMENTS
SN07	41507483	74 LS83N	TEXAS INSTRUMENTS
SN08	41174163	74 163N	TEXAS INSTRUMENTS
SN09	41507400	74 LS00	TEXAS INSTRUMENTS
SN10	41507490	74 LS90	TEXAS INSTRUMENTS
SN11	41507400	74 LS00	TEXAS INSTRUMENTS
SN12	42000900	741	FAIRCHILD
SN13	41507430	74 LS30	TEXAS INSTRUMENTS
CONNECTEUR *CONNECTOR*			
	14270116	TM27 (mâle)	TRELEC

REPERES	REFERENCE ADRET	DESIGNATION	REFERENCE FABRICANT
CONDENSATEURS *CAPACITORS*			
C01	31200110	100 pF 100 V 2 %	C333 CH/C 100E COGECO
C02	31200022	22 pF 100 V 2 %	C333 CB/C 22E COGECO
C03	37001500	22 µF 100 V + 50-20 %	GP Marquage clair I.T.T.
C04	37001500	22 µF 100 V + 50-20 %	GP Marquage clair I.T.T.
C05	37001500	22 µF 100 V + 50-20 %	GP Marquage clair I.T.T.
C06	31500310	10 nF 63 V + 50-20 %	GOX 767 14 L.C.C.
C07	37001500	22 µF 16 V + 50-20 %	GP Marquage clair I.T.T.
C08	37001800	15 µF 16 V + 50-20 %	Série 122 R.T.C.
C09	37001500	22 µF 16 V + 50-20 %	GP Marquage clair I.T.T.
C10	37001500	22 µF 16 V + 50-20 %	GP Marquage clair I.T.T.
C11	31500310	10 nF 63 V + 50-20 %	GOX 767 14 L.C.C.
C12	31200210	1 nF 100 V 10 %	C332 CA/A 1K COGECO
C13	31200210	1 nF 100 V 10 %	C332 CA/A 1K COGECO
C14	37001500	22 µF 16 V + 50-20 %	GP Marquage clair I.T.T.
C15	37001500	22 µF 16 V + 50-20 %	GP Marquage clair I.T.T.
C16	31200210	1 nF 100 V 10 %	C332 CA/A 1K COGECO
C17	37001500	22 µF 16 V + 50-20 %	GP Marquage clair I.T.T.
C18	32006500	0,1 µF 250 V 10 %	C280 AE/A 100K COGECO
C19	31500310	10 nF 63 V + 50-20 %	GOX 767 14 L.C.C.
C20	31500310	10 nF 63 V + 50-20 %	GOX 767 14 L.C.C.
C21	37001300	10 µF 16 V + 50-20 %	GP Marquage clair I.T.T.
C22	37001300	10 µF 16 V + 50-20 %	GP Marquage clair I.T.T.
BOBINAGES *COILS*			
L01	43001400	330 nH 1,1 A 10 %	53806 OREGA
DIODES			
CR01	45003100	1N 4448	I.T.T.
CR02	45003100	1N 4448	I.T.T.
CR03	45003100	1N 4448	I.T.T.
CR04	45003100	1N 4448	I.T.T.
CR05	45003100	1N 4448	I.T.T.
CR06	45003100	1N 4448	I.T.T.
TRANSISTORS			
Q01	43002200	BF 272	S.G.S.
Q02	43000400	2N 918	I.T.T.
Q03	43000400	2N 918	I.T.T.

REPERES	REFERENCE ADRET	DESIGNATION	REFERENCE FABRICANT
RESISTANCES *RESISTORS*			
R01	22100122	220 5 % 1/4 W	S07 SOVCOR
R02	22100133	330 5 % 1/4 W	S07 SOVCOR
R03	22100168	680 5 % 1/4 W	S07 SOVCOR
R04	22100210	1 k 5 % 1/4 W	S07 SOVCOR
R05	22100233	3,3 k 5 % 1/4 W	S07 SOVCOR
R06	22100122	220 5 % 1/4 W	S07 SOVCOR
R07	22100233	3,3 k 5 % 1/4 W	S07 SOVCOR
R08	22100082	82 5 % 1/4 W	S07 SOVCOR
R09	22100215	1,5 k 5 % 1/4 W	S07 SOVCOR
R10	22100315	15 k 5 % 1/4 W	S07 SOVCOR
R11	22100222	2,2 k 5 % 1/4 W	S07 SOVCOR
R12	22100122	220 5 % 1/4 W	S07 SOVCOR
R13	22100115	150 5 % 1/4 W	S07 SOVCOR
R14	22100310	10 k 5 % 1/4 W	S07 SOVCOR
R15	22100310	10 k 5 % 1/4 W	S07 SOVCOR
R16	22100215	1,5 k 5 % 1/4 W	S07 SOVCOR
R17	22100315	15 k 5 % 1/4 W	S07 SOVCOR
R18	22100215	1,5 k 5 % 1/4 W	S07 SOVCOR
R19	22100015	15 . 5 % 1/4 W	S07 SOVCOR
R20	22100118	180 5 % 1/4 W	S07 SOVCOR
R21	22100147	470 5 % 1/4 W	S07 SOVCOR
R22	22100051	51 5 % 1/4 W	S07 SOVCOR
R23	22100122	220 5 % 1/4 W	S07 SOVCOR
R24	22100215	1,5 k 5 % 1/4 W	S07 SOVCOR
R25	22100110	100 5 % 1/4 W	S07 SOVCOR
R26	22100133	330 5 % 1/4 W	S07 SOVCOR
R27	22100010	10 5 % 1/4 W	S07 SOVCOR
R28	22100133	330 5 % 1/4 W	S07 SOVCOR
R29	22100310	10 k 5 % 1/4 W	S07 SOVCOR
R30	22100056	56 5 % 1/4 W	S07 SOVCOR
R31	22100133	330 5 % 1/4 W	S07 SOVCOR
R32	22100310	10 k 5 % 1/4 W	S07 SOVCOR
R33	22100082	82 5 % 1/4 W	S07 SOVCOR
R34	22100222	2,2 k 5 % 1/4 W	S07 SOVCOR
R35	22100222	2,2 k 5 % 1/4 W	S07 SOVCOR
R36	22100233	3,3 k 5 % 1/4 W	S07 SOVCOR
R37	22100222	2,2 k 5 % 1/4 W	S07 SOVCOR
R38	22100327	27 k 5 % 1/4 W	S07 SOVCOR
R39	22100122	220 5 % 1/4 W	S07 SOVCOR
R40	22100122	220 5 % 1/4 W	S07 SOVCOR
R41	22100315	15 k 5 % 1/4 W	S07 SOVCOR
R42	22100110	100 5 % 1/4 W	S07 SOVCOF
R43	22100056	56 5 % 1/4 W	S07 SOVCOR
R44	22100110	100 5 % 1/4 W	S07 SOVCOR
R45	22100139	390 5 % 1/4 W	S07 SOVCOR

REPERES	REFERENCE ADRET	DESIGNATION	REFERENCE FABRICANT
TRANSISTORS			
Q07	43001900	BC 184C	TEXAS INSTRUMENTS
Q08	43002200	BF 272	S.G.S.
Q09	43000400	2N 918	I.T.T.
Q10	43000400	2N 918	I.T.T.
Q11	43000700	2N 2894	MOTOROLA
Q12	43000200	2N 5179	R.C.A.
Q13	4300200	2N 5179	R.C.A.
Q14	43000200	2N 5179	R.C.A.
CIRCUITS INTEGRES *INTEGRATED CIRCUITS*			
SN01	41507430	74 LS30	TEXAS INSTRUMENTS
SN02	41507490	74 LS90	TEXAS INSTRUMENTS
SN03	41507404	74 LS04	TEXAS INSTRUMENTS
SN04	41507400	74 LS00	TEXAS INSTRUMENTS
SN05	41507473	74 LS73	TEXAS INSTRUMENTS
SN06	41507400	74 LS00	TEXAS INSTRUMENTS
SN07	41507490	74 LS90	TEXAS INSTRUMENTS
SN08	41174196	74 196L	TEXAS INSTRUMENTS
CONNECTEUR *CONNECTOR*			
	14230004		

REPERES	REFERENCE ADRET	DESIGNATION	REFERENCE FABRICANT
CONDENSATEURS *CAPACITORS*			
C31	31200210	1 nF 100 V 10 %	C332 CA/A 1K COGECO
C32	31200210	1 nF 100 V 10 %	C332 CA/A 1K COGECO
C33	31200210	1 nF 100 V 10 %	C332 CA/A 1K COGECO
BOBINAGES *COILS*			
T01	02127700	Néosid F10B	ADRET ELECTRONIQUE
T02	02177600	F2	ADRET ELECTRONIQUE
T03	02177600	F2	ADRET ELECTRONIQUE
T04	02167700	H20	ADRET ELECTRONIQUE
T05	02167700	H20	ADRET ELECTRONIQUE
T06	02167700	H20	ADRET ELECTRONIQUE
T07	02166100	Néosid F40	ADRET ELECTRONIQUE
T08	02149700	Néosid F40	ADRET ELECTRONIQUE
L01	53001800	470 nH ± 10 %	53814 OREGA
L02	53001600	330 nH ± 10 %	53810 OREGA
DIODES			
CR01	45000200	1N 4151	I.T.T.
CR02	45000200	1N 4151	I.T.T.
CR03	45003100	1N 4448	I.T.T.
CR04	45003100	1N 4448	I.T.T.
CR05	45003100	1N 4448	I.T.T.
CR06	45003100	1N 4448	I.T.T.
CR07	45003100	1N 4448	I.T.T.
CR08	45003100	1N 4448	I.T.T.
CR09	45003100	1N 4448	I.T.T.
CR10	45003000	ESM 247	SESCOSEM
CR11	45003000	ESM 247	SESCOSEM
CR12	45001900	BB105B	SESCOSEM
CR13	45003100	1N 4448	I.T.T.
TRANSISTORS			
Q01	43002200	BF 272	S.G.S.
Q02	43000400	2N 918	I.T.T.
Q03	43000400	2N 918	I.T.T.
Q04	43002000	2N 5179	R.C.A.
Q05	43000500	2N 2369	MOTOROLA
Q06	43000500	2N 2369	MOTOROLA

REPERES	REFERENCE ADRET	DESIGNATION			REFERENCE FABRICANT
RESISTANCES *RESISTORS*					
R45	22100110	100	5 %	1/4 W	S07 SOVCOR
R46	22100212	1,2 k	5 %	1/4 W	S07 SOVCOR
R47	29000033	33	5 %	1/8 W	C3 SOVCOR
R48	22100122	220	5 %	1/4 W	S07 SOVCOR
R49	22100210	1 k	5 %	1/4 W	S07 SOVCOR
R50	22100310	10 k	5 %	1/4 W	S07 SOVCOR
R51	22100218	1,8 k	5 %	1/4 W	S07 SOVCOR
R52	22100310	10 k	5 %	1/4 W	S07 SOVCOR
R53	22100047	47	5 %	1/4 W	S07 SOVCOR
CONDENSATEURS *CAPACITORS*					
C01	31200110	100 pF	100 V	2 %	C333 CH/C 100E COGECO
C02	37001500	22 µF	16 V	+ 50-20 %	GP Marquage clair I.T.T.
C03	31200022	22 pF	100 V	2 %	C333 CB/C 22E COGECO
C04	31200122	220 pF	100 V	2 %	C333 CB/C 22E COGECO
C05	31200122	220 pF	100 V	2 %	C333 CBMC 22E COGECO
C06	37001500	22 µF	16 V	+ 50-20 %	GP Marquage clair I.T.T.
C07	31200210	1 nF	100 V	10 %	C332 CA/A 1K COGECO
C08	31200210	1 nF	100 V	10 %	C332 CA/A 1K COGECO
C09	31200210	1 nF	100 V	10 %	C332 CA/A 1K COGECO
C10	37001500	22 µF	16 V	+ 50-20 %	GP Marquage clair I.T.T.
C11	31200056	56 pF	100 V	2 %	C333 CB/C 56E COGECO
C12	33001800	680 pF	250 V	5 %	TVE 15C LAFAB
C13	33001800	680 pF	250 V	5 %	TVE 15C LAFAB
C14	37001500	22 µF	16 V	+ 50-20 %	GP Marquage clair I.T.T.
C15	31200047	47 pF	100 V	2 %	C333 CB/C 47E COGECO
C16	37001500	22 µF	16 V	+ 50-20 %	GP Marquage clair I.T.T.
C17	37001500	22 µF	16 V	+ 50-20 %	GP Marquage clair I.T.T.
C18	31200022	22 pF	100 V	2 %	C333 CB/C 22E COGECO
C19	37001500	22 µF	16 V	+ 50-20 %	GP Marquage clair I.T.T.
C20	32006500	0,1 µF	250 V	10 %	C280 AE/A 100K COGECO
C21	31200112	120 pF	63 V	± 2 %	632 58121 COGECO
C22	31200210	1 nF	100 V	10 %	C332 CA/A 1K COGECO
C23	31200210	1 nF	100 V	10 %	C332 CA/A 1K COGECO
C24	31200210	1 nF	100 V	10 %	C332 CA/A 1K COGECO
C25	31200210	1 nF	100 V	10 %	C332 CA/A 1K COGECO
C26	31200210	1 nF	100 V	10 %	C332 CA/A 1K COGECO
C27	31200110	100 pF	100 V	2 %	C333 CH/C 100E COGECO
C28	37001500	22 µF	16 V	+ 50-20 %	GP Marquage clair I.T.T.
C29	31200039	39 pF	100 V	2 %	C333 CB/C 39E COGECO
C30					

REPERES	REFERENCE ADRET	DESIGNATION			REFERENCE FABRICANT
RESISTANCES					
RESISTORS					
R01	22100210	1 k	5 %	1/4 W	S07 SOVCOR
R02	22100122	220	5 %	1/4 W	S07 SOVCOR
R03	22100133	330	5 %	1/4 W	S07 SOVCOR
R04	22100168	680	5 %	1/4 W	S07 SOVCOR
R05	22100139	390	5 %	1/4 W	S07 SOVCOR
R06	22100233	3,3 k	5 %	1/4 W	S07 SOVCOR
R07	22100122	220	5 %	1/4 W	S07 SOVCOR
R08	22100056	56	5 %	1/4 W	S07 SOVCOR
R09	22100182	820	5 %	1/4 W	S07 SOVCOR
R10	22100039	39	5 %	1/4 W	S07 SOVCOR
R11	22100127	270	5 %	1/4 W	S07 SOVCOR
R12	29000033	33	5 %	1/8 W	C3 SOVCOR
R13	22100112	120	5 %	1/4 W	S07 SOVCOR
R14	22100056	56	5 %	1/4 W	S07 SOVCOR
R15	22100215	1,5 k	5 %	1/4 W	S07 SOVCOR
R16	22100315	15 k	5 %	1/4 W	S07 SOVCOR
R17	22100222	2,2 k	5 %	1/4 W	S07 SOVCOR
R18	22100222	2,2 k	5 %	1/4 W	S07 SOVCOR
R19	22100222	2,2 k	5 %	1/4 W	S07 SOVCOR
R20	22100222	2,2 k	5 %	1/4 W	S07 SOVCOR
R21	22100222	2,2 k	5 %	1/4 W	S07 SOVCOR
R22	22100122	220	5 %	1/4 W	S07 SOVCOR
R23	22100112	120	5 %	1/4 W	S07 SOVCOR
R24	22100222	2,2 k	5 %	1/4 W	S07 SOVCOR
R25	22100222	2,2 k	5 %	1/4 W	S07 SOVCOR
R26	22100122	220	5 %	1/4 W	S07 SOVCOR
R27	22100168	680	5 %	1/4 W	S07 SOVCOR
R28	22100139	390	5 %	1/4 W	S07 SOVCOR
R29	22100233	3,3 k	5 %	1/4 W	S07 SOVCOR
R30	22100222	2,2 k	5 %	1/4 W	S07 SOVCOR
R31	22100322	22 k	5 %	1/4 W	S07 SOVCOR
R32	22100133	330	5 %	1/4 W	S07 SOVCOR
R33	22100233	3,3 k	5 %	1/4 W	S07 SOVCOR
R34	22100122	220	5 %	1/4 W	S07 SOVCOR
R35	22100018	18	5 %	1/4 W	S07 SOVCOR
R36	22100133	330	5 %	1/4 W	S07 SOVCOR
R37	22100210	1 k	5 %	1/4 W	S07 SOVCOR
R38	22100310	10 k	5 %	1/4 W	S07 SOVCOR
R39	22100110	100	5 %	1/4 W	S07 SOVCOR
R40	29000033	33	5 %	1/8 W	C3 SOVCOR
R41	22100122	220	5 %	1/4 W	S07 SOVCOR
R42	22100122	220	5 %	1/4 W	S07 SOVCOR
R43	22100212	1,2 k	5 %	1/4 W	S07 SOVCOR
R44	22100047	47	5 %	1/4 W	S07 SOVCOR

REPERES	REFERENCE ADRET	DESIGNATION	REFERENCE FABRICANT
		OSCILLATEUR 90/120 MHz 90/120 MHz *OSCILLATOR*	
RESISTANCES *RESISTORS*			
R33	22100147	470 5 % 1/4 W	S07 SOVCOR
R34	29000122	220 5 % 1/8 W	C3 SOVCOR
R35	22100182	820 5 % 1/4 W	S07 SOVCOR
R36	22100410	100 k 5 % 1/4 W	S07 SOVCOR
R37	22100310	10 k 5 % 1/4 W	S07 SOVCOR
R38	22100215	1,5 k 5 % 1/4 W	S07 SOVCOR
R39	22100310	10 k 5 % 1/4 W	S07 SOVCOR
R40	22100215	1,5 k 5 % 1/4 W	S07 SOVCOR
R41	22100322	22 k 5 % 1/4 W	S07 SOVCOR
R42	22100139	390 5 % 1/4 W	S07 SOVCOR
R43	29000051	51 5 % 1/8 W	C3 SOVCOR
R44	22100015	15 5 % 1/4 W	S07 SOVCOR
R45	22100147	470 5 % 1/4 W	S07 SOVCOR
R46	22100010	10 5 % 1/4 W	S07 SOVCOR
R47	22100033	33 5 % 1/4 W	S07 SOVCOR
R48	22100127	270 5 % 1/4 W	S07 SOVCOR
R49			
R50	29000022	22 5 % 1/8 W	C3 SOVCOR
R51	29000051	51 5 % 1/8 W	C3 SOVCOR
R52	29000122	220 5 % 1/8 W	C3 SOVCOR
R53	29000022	22 5 % 1/8 W	C3 SOVCOR
R54	22100182	820 5 % 1/4 W	S07 SOVCOR
R55	22100182	820 5 % 1/4 W	S07 SOVCOR
R56	29000022	22 5 % 1/8 W	C3 SOVCOR
R57	22100222	2,2 k 5 % 1/4 W	S07 SOVCOR
R58	22100010	10 5 % 1/4 W	S07 SOVCOR
R60	22100022	22 5 % 1/4 W	S07 SOVCOR
POTENTIOMETRE *POTENTIOMETER*			
P01	21531000	10 k 20 % 1/2 W	BC6-Y VARIOHM
CONDENSATEURS *CAPACITORS*			
C25	31500310	10 nF 63 V + 50-20 %	GOX 767 14 L.C.C.
C26	31200068	68 pF 100 V 2 %	C333 CB/C 68E COGECO
C27	31500310	10 nF 63 V + 50-20 %	GOX 767 14 L.C.C.

REPERES	REFERENCE ADRET	DESIGNATION	REFERENCE FABRICANT
POTENTIOMETRES *POTENTIOMETERS*			
C28	32005200	47 nF 100 V 10 %	C280 AE/A 47K COGECO
C29	37000700	4,7 µF 25 V + 50-20 %	GP Marquage clair I.T.T.
C30	31200010	10 pF 100 V 2 %	C333 CB/C 10E COGECO
C31	31500310	10 nF 63 V + 50-20 %	GOX 767 14 L.C.C.
C32	31500310	10 nF 63 V + 50-20 %	GOX 767 14 L.C.C.
C33	31500310	10 nF 63 V + 50-20 %	GOX 767 14 L.C.C.
C34	31200110	100 pF 100 V 2 %	C333 CH/C 100E COGECO
C35	31200110	100 pF 100 V 2 %	C333 CH/C 100E COGECO
C36	31500310	10 nF 63 V + 50-20 %	GOX 767 14 L.C.C.
C37	31200210	1 nF 100 V 10 %	C332 CA/A 1K COGECO
C38	31200210	1 nF 100 V 10 %	C332 CA/A 1K COGECO
C39	31200210	1 nF 100 V 10 %	C332 CA/A 1K COGECO
CV1	36001100	1 à 3,5 pF	C050/3ES R.T.C.
BOBINAGES *COILS*			
T01	02177800	F 100	ADRET ELECTRONIQUE
T10	02167700	Tore H20	ADRET ELECTRONIQUE
T11	02177900	Tore H20	ADRET ELECTRONIQUE
L03	53003000	4,7 µH 2,5 A 10 %	53801 OREGA
L04	53003000	4,7 µH 2,5 A 10 %	53801 OREGA
DIODES			
CR07	45002600	BB 109	SESCOSEM
CR08	45002600	BB 109	SESCOSEM
CR09	45002600	BB 109	SESCOSEM
CR10	45002600	BB 109	SESCOSEM
CR11	45002600	BB 109	SESCOSEM
CR12	45001300	FD 777	FAIRCHILD

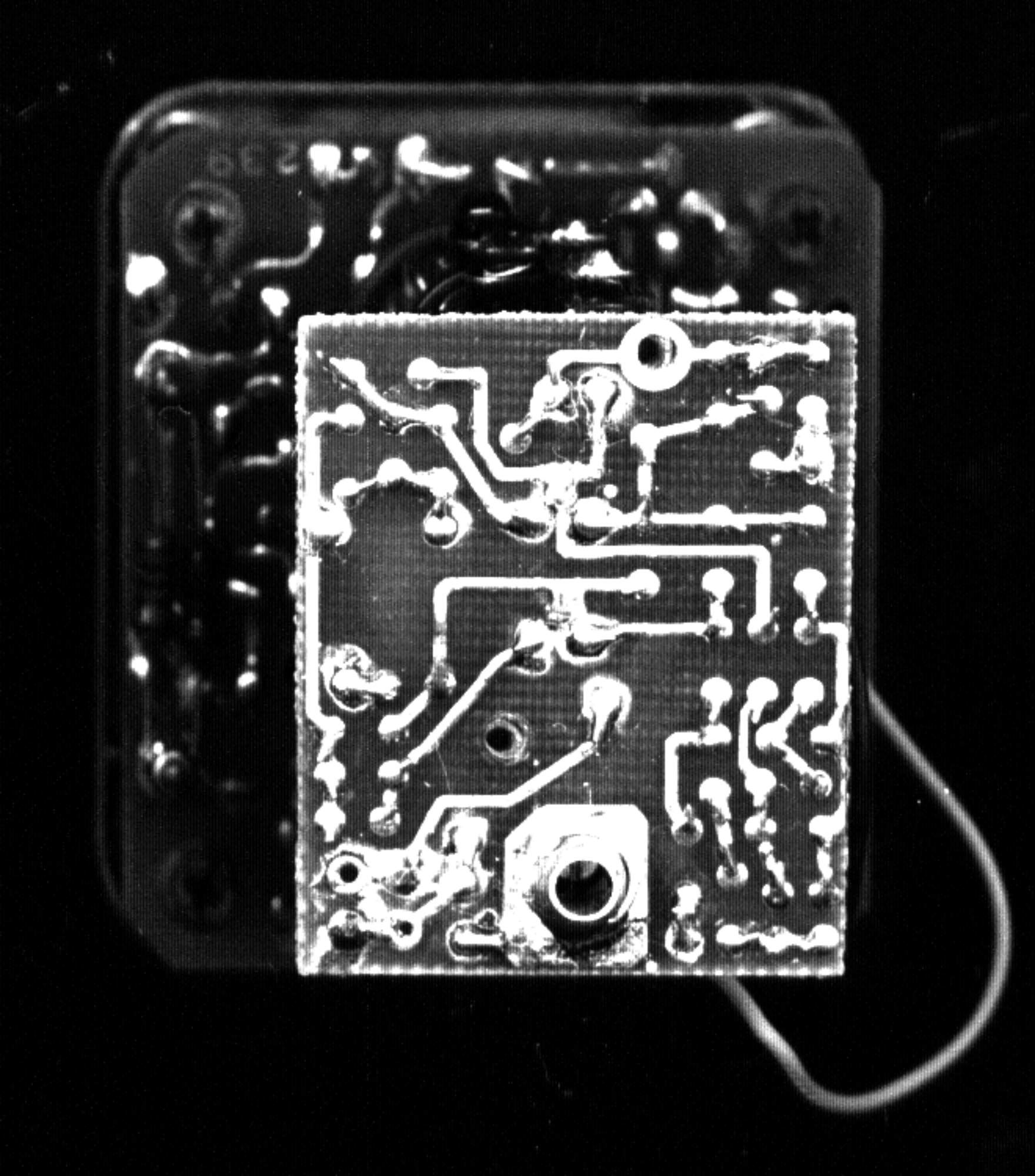

ADRET ELECTRONIQUE FRANCE
12, avenue Vladimir Komarov • BP 33 78192 Trappes Cedex • France • Tél. 051.29.72
Télex ADREL 697821 F • Siret 679805077 - 00014 • CCP Paris 21 797 04 •

DIVERS

VARIOUS ITEMS

REPERES	REFERENCE ADRET	DESIGNATION	REFERENCE FABRICANT
S01	14050009	Prise PERENA	F15F PERENA
S02	14370010	Connecteur 37 points (fem)	DC37S SOURIAU
J01	14002005	BNC	R90250 RADIALL
J02	14002005	BNC	R90250 RADIALL
J03	14001023	Douille isolée	DN4D - J. RENAUD
J04	14001011	Douille	D23203 MFOM
K01	15302084	Inverseur 2 pos.	254/DBO CHAUME
F01	17002300	250 mA FST6332	034-3411 ARNOULD
F02	17002300	250 mA FST6332	034-3411 ARNOULD
	17002500	Porte-fusible	31 2010 ARNOULD
P01	21231005	10 k 5 % 3 W	Mod. 534 SPECTROL
	65004700	Compte tours série 1370	D221 AMPHEND

REPERES	REFERENCE ADRET	DESIGNATION	REFERENCE FABRICANT
DIODES			
CR01	45003100	1N 4448	I.T.T.
CR02	45000400	1N 4004	I.T.T.
CR03 à CR97	45003100	1N 4448	I.T.T.
CR98	40000100	LED rouge	H P
CR99	40000700	LED jaune	H P
CR100	40000600	LED verte	
TRANSISTORS			
Q01	43001000	2N 2907	TEXAS INSTRUMENTS
Q02	43001900	BC 184C	TEXAS INSTRUMENTS
Q03	43000100	2N 2222	TEXAS INSTRUMENTS
Q04	43001100	BC 214C	TEXAS INSTRUMENTS
CIRCUIT INTEGRE *INTEGRATED CIRCUIT*			
SN01	41507420	74 LS20	TEXAS INSTRUMENTS

REPERES	REFERENCE ADRET	DESIGNATION			REFERENCE FABRICANT
CONDENSATEURS *CAPACITORS*					
C19 à C34	31200210	1 nF	100 V	10 %	C332 CA/A 1K COGECO
C35	31200247	4,7 nF	100 V	10 %	C332 CA/A 4K7 COGECO
C36	31200247	4,7 nF	100 V	10 %	C332 CA/A 4K7 COGECO
BOBINAGES *COILS*					
L03	53004201	47 µH	0,19 A	10 %	53862 OREGA
L04	53004201	47 µH	0,19 A	10 %	53862 OREGA
CIRCUITS INTEGRES *INTEGRATED CIRCUITS*					
SN04	41307404	74 L04 N			TEXAS INSTRUMENTS
SN05	41307404	74 L04 N			TEXAS INSTRUMENTS
SN06	41307404	74 L04 N			TEXAS INSTRUMENTS
		AFFICHAGE/*DISPLAY*			
RESISTANCES *RESISTORS*					
R01	22100139	390	5 %	1/4 W	S07 SOVCOR
R02	22100139	390	5 %	1/4 W	S07 SOVCOR
R03	22100127	270	5 %	1/4 W	S07 SOVCOR
R04	22100122	220	5 %	1/4 W	S07 SOVCOR
R05	22100310	10 k	5 %	1/4 W	S07 SOVCOR
R06	22100233	3,3 k	5 %	1/4 W	S07 SOVCOR
R07	22100310	10 k	5 %	1/4 W	S07 SOVCOR
R08	24000133	330	5 %	1/4 W	S07 SOVCOR
R09	22100210	1 k	5 %	1/4 W	S07 SOVCOR
R10	22100310	10 k	5 %	1/4 W	S07 SOVCOR
CONDENSATEURS *CAPACITORS*					
C01	37001500	22 µF	16 V	+ 50 - 20 %	GP Marquage clair I.T.T.

REPERES	REFERENCE ADRET	DESIGNATION			REFERENCE FABRICANT
		FILTRE DE CODE/*CODE FILTER* CARTE A/*A-BOARD*			
RESISTANCES *RESISTORS*					
R01 à R16	29000222	2,2 k	5 %	1/8 W	C3 SOVCOR
CONDENSATEURS *CAPACITORS*					
C01 à C16	31200210	1 nF	100 V	10 %	C332 CA/A 1K COGECO
C17	31200247	4,7 nF	100 V	10 %	C332 CA/A 4K7 COGECO
C18	31200247	4,7 nF	100 V	10 %	C332 CA/A 4K7 COGECO
BOBINAGES *COILS*					
L01	53004201	47 µH	0,19 A	10 %	53862 OREGA
L02	53004201	47 µH	0,19 A	10 %	53862 OREGA
CIRCUITS INTEGRES *INTEGRATED CIRCUITS*					
SN01	41307404	74 L04N			TEXAS INSTRUMENTS
SN02	41307404	74 L04N			TEXAS INSTRUMENTS
SN03	41307404	74 L04N			TEXAS INSTRUMENTS
		CARTE B/*B-BOARD*			
RESISTANCES *RESISTORS*					
R18 à R33	29000222	2,2 k	5 %	1/8 W	C3 SOVCOR

REPERES	REFERENCE ADRET	DESIGNATION	REFERENCE FABRICANT
DIODES			
CR01	46000500	ZPD 6,2	I.T.T.
CR02	45003100	IN 4448	I.T.T.
CR03	45003100	IN 4448	I.T.T.
TRANSISTORS			
Q03	48000800	2N 2905	TEXAS INSTRUMENTS
Q04	48000800	2N 2905	TEXAS INSTRUMENTS
Q05	48000800	2N 2905	TEXAS INSTRUMENTS
Q06	48000800	2N 2905	TEXAS INSTRUMENTS
Q07	48000600	2N 2219	TEXAS INSTRUMENTS
Q08	48000600	2N 2219	TEXAS INSTRUMENTS
Q11	48001300	TIP 41A	TEXAS INSTRUMENTS
Q12	48001300	TIP 41A	TEXAS INSTRUMENTS
Q13	48001300	TIP 41A	TEXAS INSTRUMENTS
Q14	43001900	BC 184C	TEXAS INSTRUMENTS
Q15	43001900	BC 184C	TEXAS INSTRUMENTS
Q16			
Q17			
Q18	43001100	BC 214C	TEXAS INSTRUMENTS
Q19	43001100	BC 214C	TEXAS INSTRUMENTS
CONNECTEUR *CONNECTOR*			
	14120015	TB12 (femelle)	TRELEC

REPERES	REFERENCE ADRET	DESIGNATION	REFERENCE FABRICANT
		CARTE REGULATION *REGULATION BOARD*	
RESISTANCES *RESISTORS*			
R01			
R02			
R03	25001619	6,19 k 1 % 1/4 W	ROSENTHAL SMA 207
R04	22100215	1,5 k 5 % 1/4 W	S07 SOVCOR
R05	22100247	4,7 k 5 % 1/4 W	S07 SOVCOR
R06	22100233	3,3 k 5 % 1/4 W	S07 SOVCOR
R07	25001562	5,62 k 1 % 1/4 W	ROSENTHAL SMA 207
R08	22100247	4,7 k 5 % 1/4 W	S07 SOVCOR
R09	25001619	6,19 k 1 % 1/4 W	ROSENTHAL SMA 207
R11	22100222	2,2 k 5 % 1/4 W	S07 SOVCOR
R12	25001511	5,11 k 1 % 1/4 W	ROSENTHAL SMA 207
R13	25001511	5,11 k 1 % 1/4 W	ROSENTHAL SMA 207
R14	22100215	1,5 k 5 % 1/4 W	S07 SOVCOR
R15	22100227	2,7 k 5 % 1/4 W	S07 SOVCOR
R16	22100312	12 k 5 % 1/4 W	S07 SOVCOR
R17	25001511	5,11 k 1 % 1/4 W	ROSENTHAL SMA 207
R18	25001511	5,11 k 1 % 1/4 W	ROSENTHAL SMA 207
R19	22100168	680 5 % 1M4 W	S07 SOVCOR
R20	22100210	1 k 5 % 1/4 W	S07 SOVCOR
R21	22100210	1 k 5 % 1/4 W	S07 SOVCOR
R23	28000856	0,56 10 % 3 W	SFERNICE RWM
R24	28000856	0,56 10 % 3 W	SFERNICE RWM
R25	28000827	0,27 10 % 3 W	SFERNICE RWM
CONDENSATEURS *CAPACITORS*			
C03	37001700	22 µF 10 % 15 V	L.T.T. CTS 13
C04	37000900	4,7 µF 10 % 25 V	L.T.T. CTS 13
C05	37001700	22 µF 10 % 15 V	L.T.T. CTS 13
C06	37001700	22 µF 10 % 15 V	L.T.T. CTS 13
C07	37001700	22 µF 10 % 15 V	L.T.T. CTS 13
C08	37001700	22 µF 10 % 15 V	L.T.T. CTS 13
C09			
POTENTIOMETRE *POTENTIOMETER*			
P01	211065	1 k 20 % 1/2 W	BECKMAN 89P

REPERES	REFERENCE ADRET	DESIGNATION	REFERENCE FABRICANT
		ENTREE - REDRESSEMENT FILTRAGE *INPUT - FILTER - RECTIFIER*	
FILTRE SECTEUR *LINE FILTER*	02010602		
TRANSFORMATEUR *TRANSFORMER*	10001500		
CONDENSATEURS *CAPACITORS*			
C01	35004100	6800 µF 16 V + 50-10 %	RELSIC 026 SIC SAFCO
C02	35003400	3300 µF 40 V + 50-10 %	RELSIC 026 SICSAFCO
C03	35003400	3300 µF 40 V + 50-10 %	RELSIC 026 SIC SAFCO
DIODES			
CR01	45000500	5401	GENERAL INSTRUMENTS
CR02	45000500	5401	GENERAL INSTRUMENTS
CR03	45000400	4004	GENERAL INSTRUMENTS
CR04	45000400	4004	GENERAL INSTRUMENTS
CR05	45000400	4004	GENERAL INSTRUMENTS
CR06	45000400	4004	GENERAL INSTRUMENTS

REPERES	REFERENCE ADRET	DESIGNATION	REFERENCE FABRICANT
CIRCUITS INTEGRES *INTEGRATED CIRCUITS*			
SN03	41507430	74 LS30	TEXAS INSTRUMENTS
SN04	41107472	7472 N	TEXAS INSTRUMENTS
CONNECTEUR *CONNECTOR*			
	14170163	TM 17 (mâle)	TRELEC

REPERES	REFERENCE ADRET	DESIGNATION	REFERENCE FABRICANT
CONDENSATEURS *CAPACITORS*			
C08	31200210	1 nF 100 V 10 %	C332 CA/A 1K COGECO
C09	31200210	1 nF 100 V 10 %	C332 CA/A 1K COGECO
C10	37001500	22 µF 16 V + 50-20 %	GP Marquage clair I.T.T.
C11	37001500	22 µF 16 V + 50-20 %	GP Marquage clair I.T.T.
C12	31200210	1 nF 100 V 10 %	C332 CA/A 1K COGECO
C13	37001500	22 µF 16 V + 50-20 %	GP Marquage clair I.T.T.
C14	31200210	1 nF 100 V 10 %	C332 CA/A 1K COGECO
C15	31200210	1 nF 100 V 10 %	C332 CA/A 1K COGECO
C16	37001500	22 µF 16 V + 50-20 %	GP Marquage clair I.T.T.
C17	37001500	22 µF 16 V + 50-20 %	GP Marquage clair I.T.T.
DIODES			
CR01	45003100	1N 4448	I.T.T.
CR02	45003100	1N 4448	I.T.T.
CR03	45003100	1N 4448	I.T.T.
CR04	45003100	1N 4448	I.T.T.
CR05	45003100	1N 4448	I.T.T.
CR06	45003100	1N 4448	I.T.T.
CR07	45003100	1N 4448	I.T.T.
CR08	45003100	1N 4448	I.T.T.
TRANSISTORS			
Q01	43002200	BF 272	S.G.S.
Q02	43000400	2N 918	I.T.T.
Q03	43000400	2N 918	I.T.T.
Q04	43001900	BC 184C	TEXAS INSTRUMENTS
Q05	43002200	BF 272	S.G.S.
Q06	43000400	2N 918	TEXAS INSTRUMENTS
Q07	43000400	2N 918	TEXAS INSTRUMENTS
Q08	43002200	BF 272	S.G.S.
Q09	43000400	2N 918	TEXAS INSTRUMENTS
Q10	43000400	2N 918	TEXAS INSTRUMENTS
CIRCUITS INTEGRES *INTEGRATED CIRCUITS*			
SN01	41507473	74 LS73	TEXAS INSTRUMENTS
SN02	41507400	74 LS00	TEXAS INSTRUMENTS
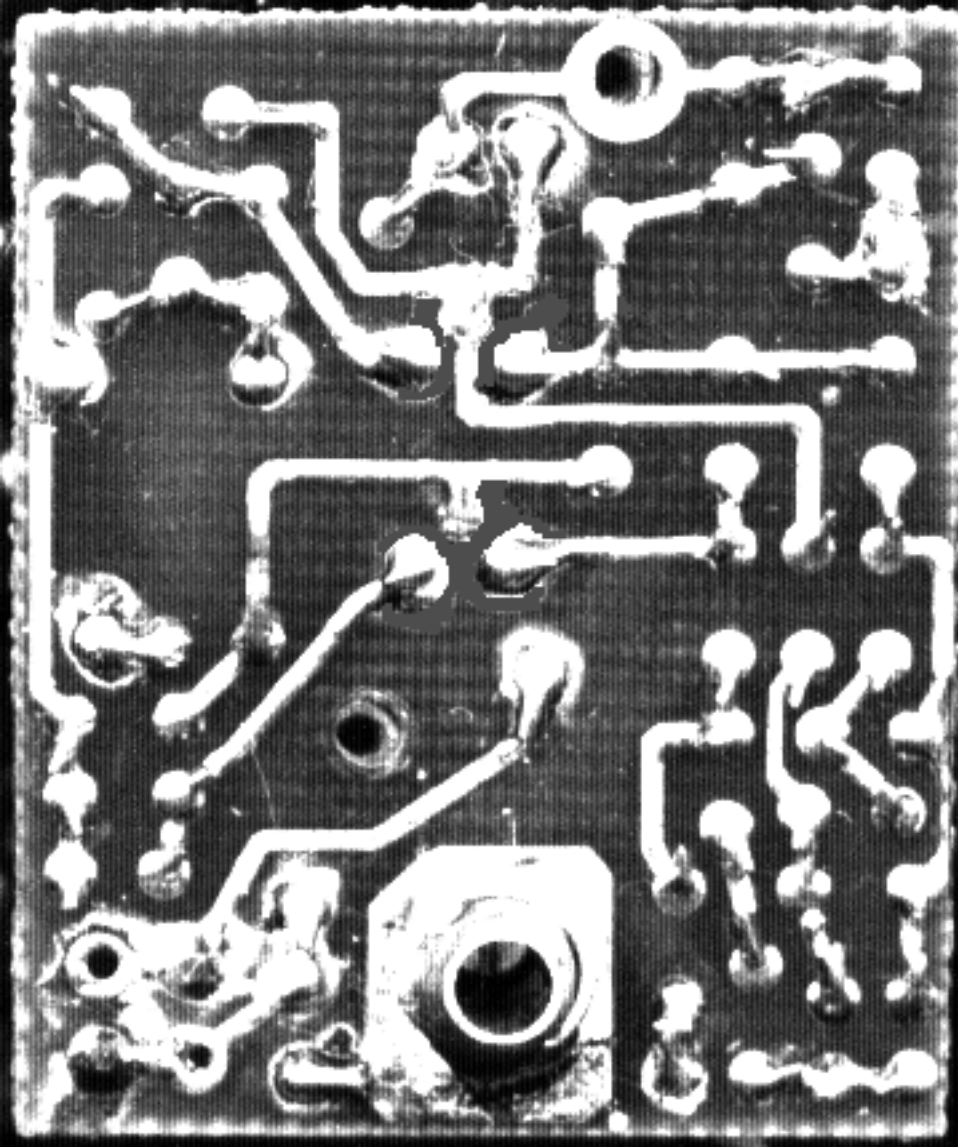
REPERES	REFERENCE ADRET	DESIGNATION	REFERENCE FABRICANT
RESISTANCES *RESISTORS*			
R01	22100210	1 k 5 % 1/4 W	S07 SOVCOR
R02	22100133	330 5 % 1/4 W	S07 SOVCOR
R03	22100233	3,3 k 5 % 1/4 W	S07 SOVCOR
R04	22100122	220 5 % 1/4 W	S07 SOVCOR
R05	22100168	680 5 % 1/4 W	S07 SOVCOR
R06	22100139	390 5 % 1/4 W	S07 SOVCOR
R07	22100233	3,3 k 5 % 1/4 W	S07 SOVCOR
R08	22100122	220 5 % 1/4 W	S07 SOVCOR
R09	22100210	1 k 5 % 1/4 W	S07 SOVCOR
R10	22100082	82 5 % 1/4 W	S07 SOVCOR
R11	22100322	22 k 5 % 1/4 W	S07 SOVCOR
R12	22100127	270 5 % 1/4 W	S07 SOVCOR
R13	22100215	1,5 k 5 % 1/4 W	S07 SOVCOR
R14	22100215	1,5 k 5 % 1/4 W	S07 SOVCOR
R15	22100210	1 k 5 % 1/4 W	S07 SOVCOR
R16	22100139	390 5 % 1/4 W	S07 SOVCOR
R17	22100215	1,5 k 5 % 1/4 W	S07 SOVCOR
R18	22100122	220 5 % 1/4 W	S07 SOVCOR
R19	22100212	1,2 k 5 % 1/4 W	S07 SOVCOR
R20	22100110	100 5 % 1/4 W	S07 SOVCOR
R21	22100110	100 5 % 1/4 W	S07 SOVCOR
R22	22100122	220 5 % 1/4 W	S07 SOVCOR
R23	22100082	82 5 % 1/4 W	S07 SOVCOR
R24	22100215	1,5 k 5 % 1/4 W	S07 SOVCOR
R25	22100139	390 5 % 1/4 W	S07 SOVCOR
R26	22100212	1,2 k 5 % 1/4 W	S07 SOVCOR
R27	22100215	1,5 k 5 % 1/4 W	S07 SOVCOR
R28	22100215	1,5 k 5 % 1/4 W	S07 SOVCOR
R29	22100122	220 5 % 1/4 W	S07 SOVCOR
R30	22100212	1,2 k 5 % 1/4 W	S07 SOVCOR
R31	22100110	100 5 % 1/4 W	S07 SOVCOR
R32	22100110	100 5 % 1/4 W	S07 SOVCOR
CONDENSATEURS *CAPACITORS*			
C01	31200082	82 pF 100 V 2 %	C333 CB/C 82E COGECO
C02	31200022	22 pF 100 V 2 %	C333 CB/C 22E COGECO
C03	37001500	22 µF 16 V + 50-20 %	GP Marquage clair I.T.T.
C04	37001500	22 µF 16 V + 50-20 %	GP Marquage clair I.T.T.
C05	31200012	12 pF 63 V ± 2 %	Série C632 COGECO
C06	37001500	22 µF 16 V + 50-20 %	GP Marquage clair I.T.T.
C07	37001500	22 µF 16 V + 50-20 %	GP Marquage clair I.T.T.